FINAL MAJOR SITE PLAN

APARTMENTS AT VERONA

BLOCK 2301, LOTS 11, 12, 14–17, PORTION OF 18, AND 19; TAX MAP #23.01

TOWNSHIP OF VERONA, ESSEX COUNTY, NEW JERSEY

OWNERS OF RECORD:

TOWNSHIP OF VERONA
600 BLOOMFIELD AVE
VERONA, NJ 07044

APPLICANT:

VERONA LIHTC URBAN RENEWAL LLC
ATT: LARA SCHWAGER, SENIOR VICE PRESIDENT OF DEVELOPMENT
5 COMMERCE WAY, SUITE 204
HAMILTON, NJ 08691
(609) 751–9664

pirhl

ENGINEER

ESE CONSULTANTS, INC.
100 WILLOW BROOK ROAD, SUITE 200
FREEHOLD, NJ 07728
(732) 446–8446

CONTACT:
JAY S. KRUSE, P.E.
PROJECT ENGINEER

LANDSCAPE ARCHITECT

MELILLO+BAUER ASSOCIATES
200 UNION AVENUE
BRIELLE, NJ 08730
(732) 528–0664

CONTACT:
LYNN A. YAHIA, LA
LANDSCAPE ARCHITECT

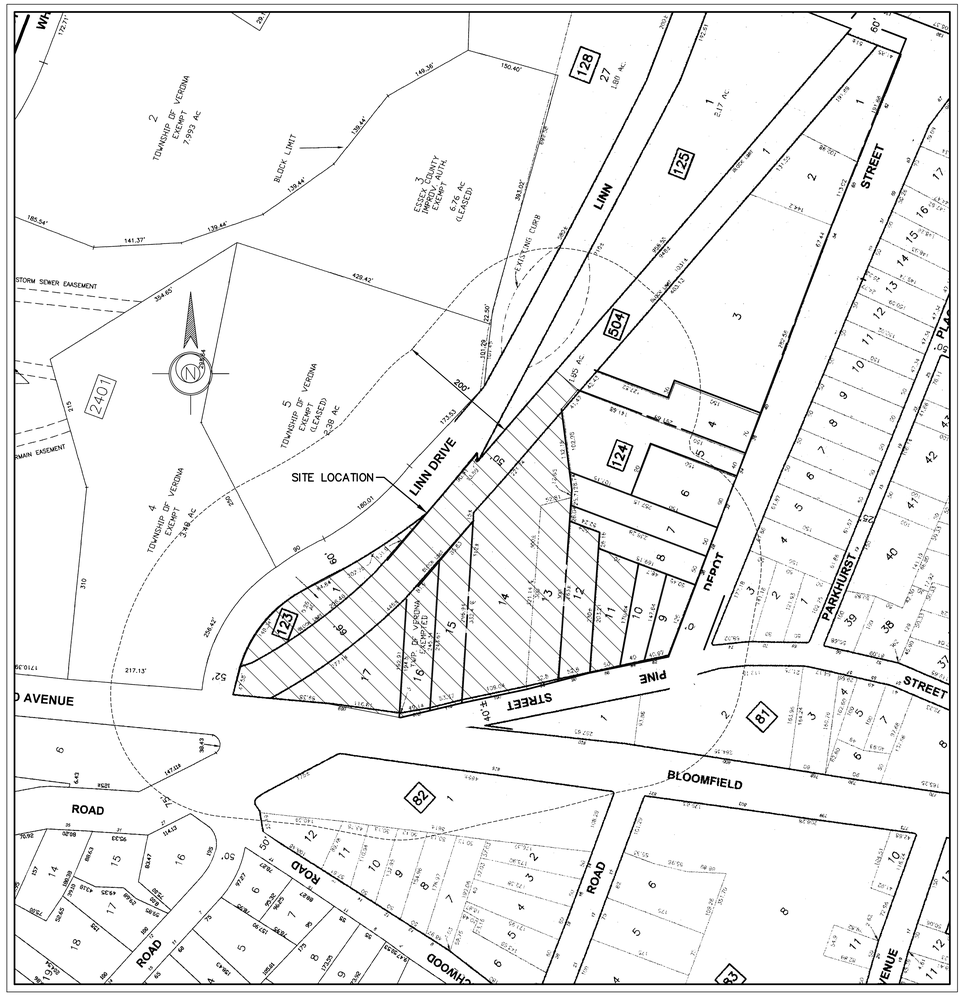

PROJECT LOCATION MAP

SCALE: 1"=100'

SHEET INDEX

FINAL MAJOR SITE PLAN		
SHEET NO.	REFERENCE NO.	DESCRIPTION
1	SD01.01	COVER SHEET
2	SD02.01	GENERAL NOTES
3	SD03.01	EXISTING FEATURES/DEMOLITION PLAN
4	SD04.01	SITE LAYOUT & DIMENSION PLAN
5	SD05.01	GRADING PLAN
6	SD06.01	UTILITY PLAN
7	SD07.01	LIGHT PLAN
8	SD08.01	PROFILE PLAN
9–11	SD09.01–SD09.03	CONSTRUCTION DETAILS
12	ES10.01	SOIL EROSION & SEDIMENT CONTROL PLANS
13	ES10.02	SOIL EROSION & SEDIMENT CONTROL NOTES & DETAILS

APPROVED BY THE VERONA TOWNSHIP PLANNING BOARD.

PRELIMINARY _____ FINAL _____

CHAIRMAN DATE

SECRETARY DATE

APPLICATION _____

DATE: 10/28/21
JAY S. KRUSE
PROFESSIONAL ENGINEER
N.J. LICENSE
NO. GE041356

ESE CONSULTANTS
ENGINEERING • PLANNING • SURVEYING • ENVIRONMENTAL
ESE Consultants, Inc.
100 Willow Brook Road • Suite 200 • Freehold, NJ 07728
T: 732-446-8446
New Jersey Certificate of Authorization No. 24GA27999900

REV.	DATE	DESCRIPTION	DRAWN

New Jersey One Call
1 Corporate Place South
Suite 151
Piscataway, NJ 08854
1-800-272-1000
or 8-1-1
www.njt-call.org

811 Know what's below. Call before you dig.

COVER SHEET

FINAL MAJOR SITE PLAN
APARTMENTS AT VERONA
BLOCK 2301, LOTS 11, 12, 14–17, PORTION OF 18, AND 19, TAX MAP #23.01
TOWNSHIP OF VERONA, ESSEX COUNTY, NEW JERSEY

DATE: OCT. 28, 2021	SCALE: AS SHOWN
DESIGN: JSK	DRAWN: TJG
JOB NO.: 20024	FILE NAME: 20024-01-COVER
REF. NO.: SD01.01	
SHEET NO.: 1 OF 13	

ESE CTB
N:\PROJECTS\NEW JERSEY\20024-PIRHL-VERONA\ENGDEPT\DRAWINGS\20024-01-COVER.DWG-TGORMLEY-10/28/2021 1:16 PM

PROPERTY OWNERS LIST

TOWNSHIP OF VERONA
VERONA, NEW JERSEY 07044

LIST OF PROPERTY OWNERS SERVED WITHIN 200 FEET OF:
BLOCK 2301 LOTS 11, 12,14,15, 16, 17, 18, 19

BLOCK	LOT	NAME & ADDRESS	BLOCK	LOT	NAME & ADDRESS
1601	1	ARCADIAN PROFESSIONAL PROPERTIES NJ	2301	1	CAMPUS DEVELOPMENT LLC
		825 BLOOMFIELD AVE, VERONA, NJ 07044			62 DEPOT ST, VERONA, NJ 07044
1601	2	COONEY, JASON & LYNDSAY	2301	2	WILLMATT COMPANY LLC
		14 CHESTNUT RD, VERONA, NJ 07044			60 DEPOT ST, VERONA, NJ 07044
1601	7	POLIFRONE, MICHAEL & DRAGO, KARLA	2301	3	I & L HOLDINGS, LLC
		8 BEECHWOOD RD, VERONA, NJ 07044			2322 MORRIS AVE, UNION NJ 07083
1601	8	EHRICH, DEAN & NICOLE			RE: 40-54 DEPOT STREET
		10 BEECHWOOD RD, VERONA, NJ 07044	2301	4	J & J BIANCO HOLDING COMPANY
1601	9	GAYNOR, PETER & CATHERINE			36 DEPOT ST, VERONA, NJ 07044
		12 BEECHWOOD RD, VERONA, NJ 07044	2301	5	BIANCO, JOHN A & JOHN D
1601	10	TICHENOR, JOHN & GENTILE, LINDA			34 DEPOT ST, VERONA, NJ 07044
		14 BEECHWOOD RD, VERONA, NJ 07044	2301	6	32 DEPOT, LLC
1601	11	WOJTAL, MAUREEN			312 FAIRVIEW AVE, CEDAR GROVE, NJ 07009
		16 BEECHWOOD RD, VERONA, NJ 07044			RE: 32 DEPOT STREET VERONA
1601	12	KOUZMINA, SVETLAND & FLORES, JAVIER	2301	7	JOHN D BIANCO LLC
		18 BEECHWOOD RD, VERONA, NJ 07044			28 DEPOT ST, VERONA, NJ 07044
			2301	8	BIANCO, JOHN D & MARIE A
1603	1	COLLINS, MARSHA			26 DEPOT ST, VERONA, NJ 07044
		562 MONMOUTH AVE APT 3B	2301	9	MORGAN, KOBIE & MELISSA
		SPRING LAKE HEIGHTS, NJ 07762			82 PINE ST, VERONA, NJ 07044
		RE: 820 BLOOMFIELD AVENUE VERONA	2301	10	MARTIN, JOEL & MONIKA
1603	2	VERONA FIELDSTONE LLC			80 PINE ST, VERONA, NJ 07044
		1719 ROUTE 10 #220, PARSIPPANY, NJ 07054	2301	20	CAM GAR AT VERONA LLC
		RE: 800 BLOOMFIELD AVENUE VERONA			PO BOX 837, 39 MAIN ST, CHATHAM, NJ 07928
					RE: LINN DRIVE
1604	2	PUCHALSKI, GLEN & DROSSMAN, SARAH			
		70 PINE ST, VERONA, NJ 07044	2302	1	CAM GAR
1604	3	COAKLEY, THOMAS & JENNIFER			PO BOX 837, 39 MAIN ST, CHATHAM, NJ 07928
		74 PINE ST, VERONA, NJ 07044			RE: LINN DRIVE
1604	4	O'NEILL, JOHN A. & DENA			
		29 DEPOT STREET, VERONA NJ 07044	2304	3	JACKSON, CHARLES R & MARY WILLIAMS
1604	13	CALLARI, JOHN			126 PERSONETTE AVE, VERONA, NJ 07044
		51 DEPOT ST, VERONA, NJ 07044	2304	4	VERZELLA, JONATHAN & DENISE
1604	14	DUDA, MICHAEL & KULESA, NICOLE			130 PERSONETTE AVE, VERONA, NJ 07044
		55 DEPOT ST, VERONA, NJ 07044	2304	10	VASALANI, MICHAEL J & JOAN M
1604	15	DI ROMA, FRANK & O'NEILL DENA			134 PERSONETTE AVE, VERONA NJ 07044
		57 DEPOT ST, VERONA, NJ 07044	2304	11	CAM GAR
1604	16	YOUNG, GENE M ESTATE OF			PO BOX 837, 39 MAIN ST, CHATHAM, NJ 07928
		59 DEPOT ST, VERONA, NJ 07044			RE: LINN DRIVE
1604	17	ROMAN, JOSE & MONICA			
		63 DEPOT ST, VERONA, NJ 07044	2401	3	ESSEX COUNTY IMPROVEMENT AUTHORITY
1604	18	VAN BENSCHOTEN, M & STIEFBOLD, K			155 PASSAIC AVE 4TH FL, FAIRFIELD, NJ 07004
		131 PERSONETTE AVE, VERONA, NJ 07044			RE: 880 BLOOMFIELD AVENUE VERONA
1604	19	KIEL, CHRISTOPHER & ALEXIS	2401	4	TOWNSHIP OF VERONA
		129 PERSONETTE AVE, VERONA, NJ 07044			600 BLOOMFIELD AVE, VERONA, NJ 07044
					RE: 880 BLOOMFIELD AVENUE VERONA
2205	6	A&R SKYLINE PROPERTIE, LLC	2401	5	COUNTY OF ESSEX
		704 PASSAIC AVE, WEST CALDWELL, NJ 07006			HALL OF RECORDS, NEWARK, NJ 07102
		RE: 885 BLOOMFIELD AVENUE VERONA			RE: LINN DRIVE

UTILITY AND ADDITIONAL NOTIFICATION LIST

NEW JERSEY BELL TELEPHONE CO.
ATTN: CORPORATE SECRETARY
540 BROAD STREET ROOM 1005, NEWARK, NJ 07101

AMERICAN TELEPHONE & TELEGRAPH CO.
ATTN: KARL GROSSMANN
PATRICIA DRIVE, FLANDERS, NJ 07836

PUBLIC SERVICE ELECTRIC & GAS CO.
ATTN: MANAGER CORPORATE PROPERTIES
80 PARK PLACE, T6B, NEWARK, NJ 07102

PASSAIC VALLEY WATER COMMISSION
ATTN: CORPORATE SECRETARY
1525 MAIN AVENUE, CLIFTON, NJ 07011

MCI 10 MARCELLO AVE., ATTN: JOHN SCOCCOLA
WEST ORANGE, NJ 07052

COMCAST CABLE
800 RAHWAY AVENUE, UNION, NEW JERSEY 07083

BULK REQUIREMENTS

BULK REQUIREMENTS FOR THE MULTI FAMILY–MID RISE REDEVELOPMENT OVERLAY ZONE (A–2R)
PER THE DEPOT AND PINE REDEVELOPMENT AREA REDEVELOPMENT PLAN

ZONE REQUIREMENTS:	REQUIRED	PROPOSED
MINIMUM ACREAGE	4.0 AC	4.153 AC
MAXIMUM RESIDENTIAL DENSITY PER ACRE	N/A	N/A
MINIMUM FRONT YARD SETBACK–FEET	20 FT	21 FT
MINIMUM SIDE YARD SETBACK–INDIVIDUAL OR ONE–FEET	15 FT	NA
MINIMUM SIDE YARD SETBACK COMBINED OR BOTH–FEET	35 FT	NA
MINIMUM REAR YARD SETBACK–FEET	20 FT	21 FT
ACCESSORY STRUCTURE SETBACKS		
SHEDS		
• FRONT	20 FT	10 FT (V)
• SIDE	3 FT	NA
• REAR	3 FT	22.6 FT
TRASH ENCLOSURE		
• FRONT	20 FT	22.33 FT
• SIDE	5 FT	NA
• REAR	5 FT	6.35 FT
MAXIMUM DWELLING UNITS PER ACRE	N/A	N/A
MAXIMUM HEIGHT–BUILDING AFFORDABLE HOUSING*	54 FT	BLDG 'A'=47.31', BLDGS 'B' & 'C'=40.05
MAXIMUM (IMPROVED) LOT COVERAGE–PERCENT	80%	57.2%
MAXIMUM IMPROVED LOT COVERAGE WITH 87 UNITS	90%	NA
MAXIMUM DWELLING UNITS–PROJECT AREA	100 UNITS	95 UNITS

*THE "PERMITTED EXCEPTIONS" REGARDING "HEIGHT REGULATIONS" §150–5.2B. SHALL BE APPLICABLE TO THE A–2R OVERLAY ZONE

PARKING REQUIREMENT PER MULTI FAMILY–MID RISE REDEVELOPMENT OVERLAY ZONE (A–2R)

PARKING STANDARD	UNITS	REQUIRED	PROPOSED
1.5 SPACES PER AFFORDABLE RESIDENTIAL UNIT	95	143 SPACES	143 SPACES

VARIANCES, WAIVERS AND/OR EXCEPTIONS

1. VARIANCE FOR ACCESSORY BUILDING (SHED) FRONT YARD SETBACK OF 10 FT WHERE 20 FT IS REQUIRED. (APPROVED PER PLANNING BOARD RESOLUTION NO. 2020–08, DATED SEPTEMBER 1, 2020)

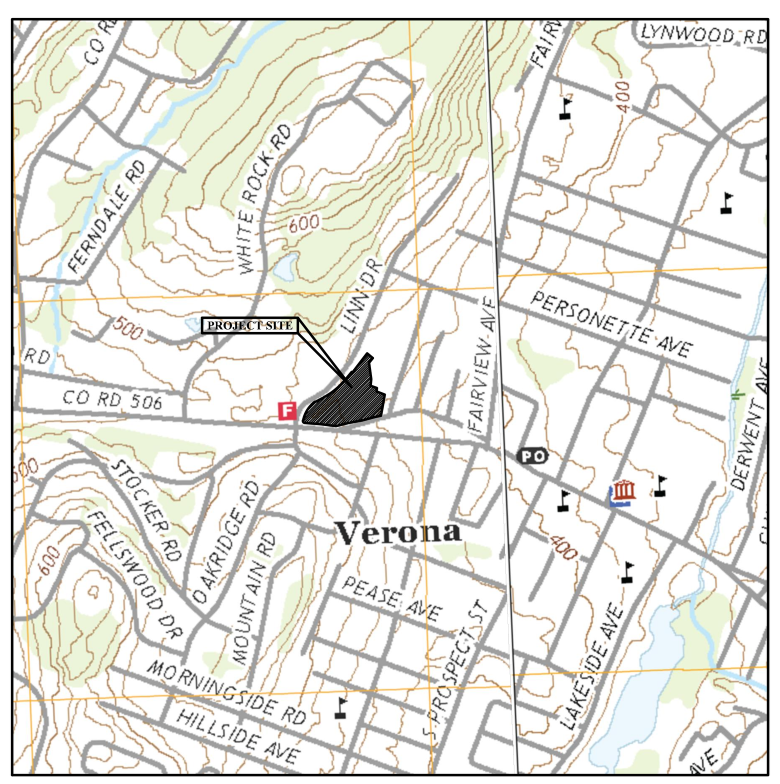

USGS MAP

SCALE: 1"=1000'

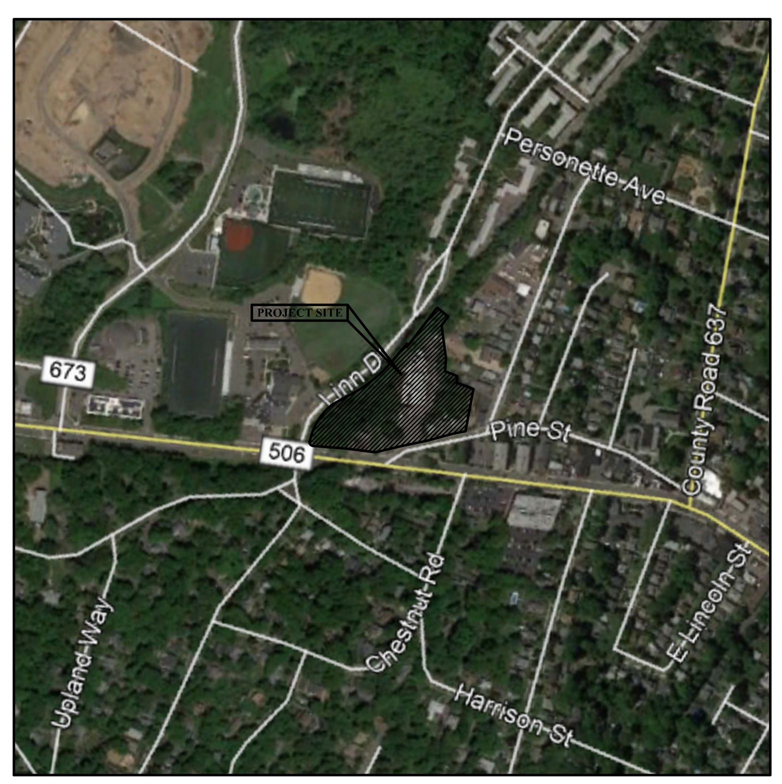

ROADWAY MAP

SCALE: 1"=500'

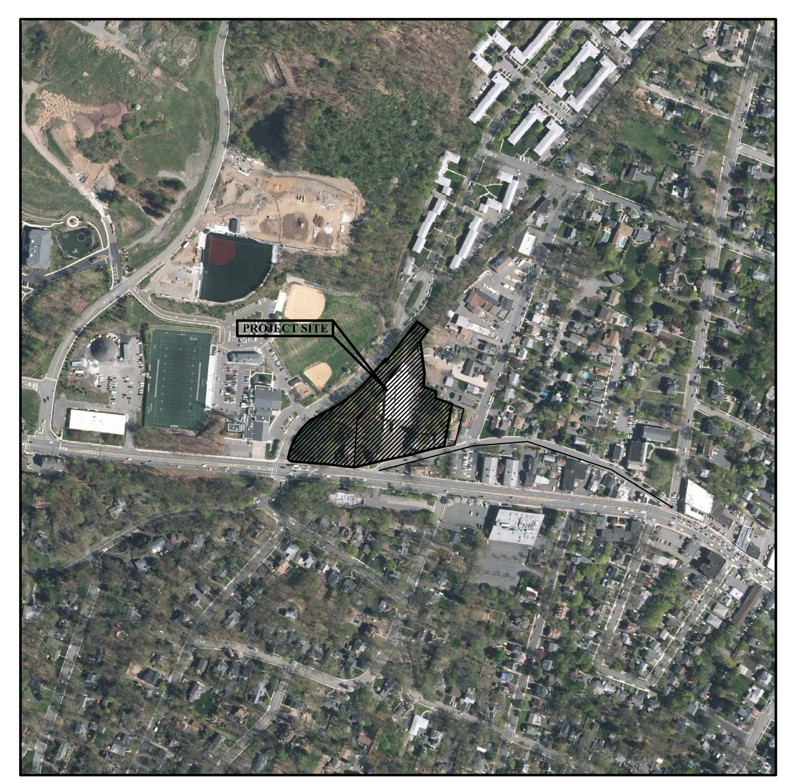

AERIAL MAP

SCALE: 1"=500'

GENERAL NOTES

1. OWNER:

   TOWNSHIP OF VERONA
   600 BLOOMFIELD AVE
   VERONA, NJ 07044

2. APPLICANT:

   VERONA LIHTC URBAN RENEWALL LLC
   LARA SCHWAGER, SENIOR VICE PRESIDENT OF DEVELOPMENT
   5 COMMERCE WAY, SUITE 204
   HAMILTON, NJ 08691

3. SITE DATA:

   TAX PARCEL NUMBERS: BLOCK 2301, LOTS 11, 12, 14–17, PORTION OF 18, AND 19
   ZONE: MULTI–FAMILY MID RISE OVERLAY ZONE (AR–2)
   (PER THE DEPOT AND PINE REDEVELOPMENT AREA REDEVELOPMENT PLAN)
   OVERALL PROPERTY AREA: 5.025 AC (218,914 SF)
   NUMBER OF EXISTING LOTS: 8 LOTS
   NUMBER OF PROPOSED LOTS: 2 LOTS

4. TRACT IS KNOWN AND DESIGNATED AS BLOCK 2301, LOTS 11–12, 14–17, PORTION OF 18, AND 19 AS SHOWN ON SHEET 23.01 OF THE OFFICIAL TAX MAPS OF THE TOWNSHIP OF VERONA, ESSEX COUNTY, NEW JERSEY.
5. BOUNDARY AND TOPOGRAPHIC INFORMATION TAKEN FROM PLAN ENTITLED "BOUNDARY & TOPOGRAPHIC SURVEY, TOPOGRAPHIC DETAIL, LOTS 11, 12, 14, 15, 16, 17, 18 & 19, BLOCK 2301, TOWNSHIP OF VERONA, ESSEX COUNTY, NEW JERSEY" PREPARED BY NEGLIA ENGINEERING ASSOCIATES DATED NOVEMBER 7, 2019, REVISED JUNE 16, 2020.
6. THE VERTICAL DATUM SHOWN IS BASED ON NAVD88 AS ESTABLISHED USING GPS METHODS AND THE SMARTNET NETWORK.
7. HORIZONTAL DATUM FOR SITE BASED ON NAD 83 (2011), NJ STATE PLANE COORDINATE SYSTEM AS ESTABLISHED USING GPS METHODS AND THE SMARTNET NETWORK.
8. ALL WORK SHALL CONFORM WITH THE LATEST EDITION OF THE FOLLOWING:
   - NJDOT SPECIFICATIONS FOR ROAD AND BRIDGE CONSTRUCTION, 2007 EDITION
   - ESSEX COUNTY DESIGN STANDARDS
   - MUNICIPAL DESIGN STANDARDS
   - N.J. RESIDENTIAL SITE IMPROVEMENT STANDARDS (RSIS)
   - CURRENT MANUFACTURERS SPECIFICATIONS, STANDARDS AND REQUIREMENTS
   - CURRENT, PREVAILING UTILITY COMPANY OR AUTHORITY SPECIFICATIONS, STANDARDS, AND REQUIREMENTS.
9. ALL BARRIER FREE CONSTRUCTION TO BE IN ACCORDANCE WITH THE LATEST STANDARDS OF THE NEW JERSEY UNIFORM CONSTRUCTION CODE, SUBCHAPTER 7: BARRIER FREE SUBCODE AND/OR 2010 ADA STANDARDS, AS APPLICABLE.
10. THE CONTRACTOR IS RESPONSIBLE FOR ALL WORKER SAFETY, TRAINING, AND SAFETY DEVICE USAGE FOR AND DURING THE CONSTRUCTION OF THE IMPROVEMENTS SHOWN ON THIS PLAN.
11. THE CONTRACTOR IS DESIGNATED AS RESPONSIBLE PARTY DURING CONSTRUCTION OF IMPROVEMENTS SHOWN HERON. AS SUCH CONTRACTOR WILL PROVIDE ADEQUATE SAFETY TRAINING, EQUIPMENT, AND OVERSIGHT.
12. THE CONTRACTOR IS RESPONSIBLE FOR ALL REQUIRED PERMITS AND APPROVALS FOR CONSTRUCTION OF THE DEPICTED SITE IMPROVEMENTS.
13. ALL DISTURBED AREAS ON SITE TO BE STABILIZED IN ACCORDANCE WITH THE STANDARDS FOR SOIL EROSION AND SEDIMENT CONTROL IN NEW JERSEY, AND LOCAL REQUIREMENTS OF THE HUDSON ESSEX PASSAIC SOIL CONSERVATION DISTRICT.
14. THE NEW JERSEY ONE CALL SYSTEM SHOULD BE CONTACTED A MINIMUM OF THREE (3) BUSINESS DAYS PRIOR TO ANY EXCAVATION OR SOIL DISTURBANCE ON–SITE OR WITHIN PUBLIC ROW. CALL 811 OR (800)–272–1000.
15. ALL UTILITY CONNECTIONS AND RELOCATIONS ARE SHOWN SCHEMATICALLY. THE CONTRACTOR SHALL CONTACT AND COORDINATE WITH EACH UTILITY COMPANY OR AUTHORITY TO PROVIDE THE MOST APPROPRIATE LOCATION FOR UTILITY CONNECTIONS AND/OR RELOCATIONS.
16. EXISTING SITE AND UTILITY INFORMATION SHOWN ON THIS PLAN HAS BEEN COLLECTED FROM VARIOUS SOURCES AND IS NOT GUARANTEED AS TO ACCURACY OR COMPLETENESS. CONTRACTOR SHALL VERIFY PRIOR TO CONSTRUCTION.
17. ALL TRAFFIC SIGNS AND STRIPING SHALL CONFORM WITH THE MANUAL ON UNIFORM TRAFFIC CONTROL DEVICES (MUTCD), LATEST EDITION.
18. DURING ROW WORK, TRAFFIC TO BE PROTECTED AND MAINTAINED IN ACCORDANCE WITH MUTCD PART VI, LATEST EDITION, AND/OR TOWNSHIP OF VERONA REQUIREMENTS.
19. THE CONTRACTOR TO MATCH EXISTING PAVEMENT SPECIFICATIONS FOR ALL PAVEMENT REPAIRS TO EXISTING ROADWAYS.
20. CONCRETE SHALL BE NJDOT CLASS "B" UNLESS OTHERWISE STATED HEREON OR WITHIN THE CONSTRUCTION DETAILS.
21. THE CONTRACTOR SHALL DEMOLISH EXISTING STRUCTURES, APPURTENANCES, AND MATERIALS AS SHOWN ON THE PLANS, AND SHALL BE RESPONSIBLE FOR EXISTING SERVICE DISCONNECTIONS AND DEMOLITION PERMITS.
22. ALL IMPROVEMENTS SHOWN HEREON "TO BE REMOVED" SHALL BE DISPOSED OF IN A MANNER THAT MEETS, LOCAL, COUNTY, STATE AND FEDERAL REQUIREMENTS.
23. THE CONTRACTOR SHALL NOTIFY THE UNDERSIGNED PROFESSIONAL IF FIELD CONDITIONS VARY FROM THAT WHICH IS SHOWN HEREON.
24. THIS PLAN SET HAS BEEN PREPARED FOR MUNICIPAL AND AGENCY APPROVALS ONLY. THIS PLAN SHALL NOT BE USED FOR CONSTRUCTION PURPOSES UNTIL MARKED WITH A NOTE STATING "FOR CONSTRUCTION". ALL BUILDING FOOTPRINTS DIMENSIONS SHOWN HEREON ARE APPROXIMATE. FINAL BUILDING FOOTPRINT DIMENSIONS FOR EACH BUILDING SHALL BE FURNISHED AT THE TIME OF APPLICATION FOR A BUILDING PERMIT.
25. ALL BUILDING STRUCTURES SHALL CONFORM TO THE TOWNSHIP OF VERONA BULK ZONING REQUIREMENT FOR APPLICABLE ZONE.
26. ALL PROPOSED BLOCK & LOT NUMBERS HAVE BEEN REVIEWED AND APPROVED BY THE TOWNSHIP TAX ASSESSOR.
27. ALL MECHANICAL AND ELECTRICAL EQUIPMENT FOR THE BUILDING SHALL BE ROOF MOUNTED AND SHIELDED FROM PUBLIC VIEW WITH EXCEPTION OF METERING.
28. ALL PROPOSED SHEET FLOW LAWN GRADING SHALL BE 2% MINIMUM. EMBANKMENT AND LAWN GRADING SHALL NOT EXCEED 3 FT. HORIZONTAL FOR EVERY 1 FT VERTICAL.
29. ALL STORM WATER MANAGEMENT FACILITIES (BASINS, STRUCTURES, INLETS, PIPING, ETC.) LOCATED OUTSIDE OF THE PUBLIC RIGHT OF WAY SHALL BE OWNED AND MAINTAINED BY THE HOMEOWNERS ASSOCIATION OR PROPERTY MANAGER UNLESS OTHERWISE NOTED.
30. TRASH WITHIN BUILDING A SHALL BE COMPACTED AND STORED WITHIN EXISTING BUILDING IN DEDICATED COMPACTOR ROOM. COLLECTED TRASH SHALL BE PLACED IN INDIVIDUAL CONTAINERS AND WHEELED TO CURB FOR PICK–UP BY WASTE HAULER DURING NORMAL MUNICIPAL COLLECTION SCHEDULE OR BY PRIVATE HAULER.
31. TRASH FOR BUILDING B & C SHALL BE DISPOSED OF WITHIN DUMPSTER CONTAINERS AT THE DESIGNATED TRASH ENCLOSURE. COLLECTED TRASH SHALL BE PICKED UP BY PRIVATE HAULER ON NORMAL OPERATION SCHEDULE.
32. A KNOX BOX SHALL BE INSTALLED NEAR MAIN ENTRANCE TO ALLOW IMMEDIATE ACCESS TO THE BUILDING BY EMERGENCY RESPONSE PERSONNEL.
33. NO PLANTING, BERM, SIGN, FENCE OR OTHER STRUCTURE EXCEEDING 30 INCHES IN HEIGHT SHALL BE LOCATED IN THE SIGHT TRIANGLE.
34. SHOP DRAWINGS FOR ALL STORMWATER MANAGEMENT AND DRAINAGE STRUCTURES SHALL BE SUBMITTED TO THE TOWNSHIP ENGINEER FOR REVIEW AND APPROVAL, PRIOR TO FABRICATION.

DATE: 10/28/21
JAY S. KRUSE
PROFESSIONAL ENGINEER
NEW JERSEY LICENSE
NO. GE041356

ESE CONSULTANTS
ENGINEERING • PLANNING • SURVEYING • ENVIRONMENTAL
ESE Consultants, Inc.
100 Willow Brook Road • Suite 200 • Freehold, NJ 07728
T: 732-446-8446
New Jersey Certificate of Authorization No. 24GA27999900

REV.	DATE	DESCRIPTION	DRAWN

New Jersey One Call
1 Corporate Place South
Suite 150
Piscataway, NJ 08854
1-800-272-1000
or 8-1-1
www.nj1-call.org
811 Know what's below. Call before you dig.

GENERAL NOTES

FINAL MAJOR SITE PLAN
APARTMENTS AT VERONA
BLOCK 2301, LOTS 11, 12, 14–17, PORTION OF 18, AND 19, TAX MAP #23.01
TOWNSHIP OF VERONA, ESSEX COUNTY, NEW JERSEY

DATE: OCT. 28, 2021	SCALE: AS SHOWN
DESIGN:	DRAWN:
JOB NO.: 20024	FILE NAME: 20024–02–NOTES
REF. NO.: SD02.01	
SHEET NO.: 2 OF 13	

ESE.CTB
N:\PROJECTS\NEW JERSEY\20024–PIRHL–VERONA\ENGDEPT\DRAWINGS\20024–02–NOTES.DWG–CGOELZ–10/28/2021 10:07 AM

GENERAL NOTES:

1. TRACT IS KNOWN AND DESIGNATED AS BLOCK 2301, LOTS 10–12, 14–17, PORTION OF 18, AND 19 AS SHOWN ON SHEET 23.01 OF THE OFFICIAL TAX MAPS OF THE TOWNSHIP OF VERONA, ESSEX COUNTY, NEW JERSEY.
2. BOUNDARY AND TOPOGRAPHIC INFORMATION TAKEN FROM PLAN ENTITLED "BOUNDARY & TOPOGRAPHIC SURVEY, TOPOGRAPHIC DETAIL, LOTS 11, 12, 14, 15, 16, 17, 18 & 19, BLOCK 2301, TOWNSHIP OF VERONA, ESSEX COUNTY, NEW JERSEY" PREPARED BY NEGLIA ENGINEERING ASSOCIATES DATED NOVEMBER 7, 2019, REVISED JUNE 16, 2020.
3. THE VERTICAL DATUM SHOWN IS BASED ON NAVD88 AS ESTABLISHED USING GPS METHODS AND THE SMARTNET NETWORK.
4. HORIZONTAL DATUM FOR SITE BASED ON NAD 83 (2011), NJ STATE PLANE COORDINATE SYSTEM AS ESTABLISHED USING GPS METHODS AND THE SMARTNET NETWORK.
5. ALL DISTURBED AREAS ON SITE TO BE STABILIZED IN ACCORDANCE WITH THE STANDARDS FOR SOIL EROSION AND SEDIMENT CONTROL IN NEW JERSEY, AND LOCAL REQUIREMENTS OF THE HUDSON ESSEX PASSAIC SOIL CONSERVATION DISTRICT.
6. THE NEW JERSEY ONE CALL SYSTEM SHOULD BE CONTACTED A MINIMUM OF THREE (3) BUSINESS DAYS PRIOR TO ANY EXCAVATION OR SOIL DISTURBANCE ON–SITE OR WITHIN PUBLIC ROW. CALL 811 OR (800)–272–1000.
7. ALL UTILITY CONNECTIONS AND RELOCATIONS ARE SHOWN SCHEMATICALLY. THE CONTRACTOR SHALL CONTACT AND COORDINATE WITH EACH UTILITY COMPANY OR AUTHORITY TO PROVIDE THE MOST APPROPRIATE LOCATION FOR UTILITY CONNECTIONS AND/OR RELOCATIONS.
8. EXISTING SITE AND UTILITY INFORMATION SHOWN ON THIS PLAN HAS BEEN COLLECTED FROM VARIOUS SOURCES AND IS NOT GUARANTEED AS TO ACCURACY OR COMPLETENESS. CONTRACTOR SHALL VERIFY PRIOR TO CONSTRUCTION.
9. THE CONTRACTOR SHALL DEMOLISH EXISTING STRUCTURES, APPURTENANCES, AND MATERIALS AS SHOWN ON THE PLANS, AND SHALL BE RESPONSIBLE FOR EXISTING SERVICE DISCONNECTIONS AND DEMOLITION PERMITS.
10. ALL IMPROVEMENTS SHOWN HEREON "TO BE REMOVED" SHALL BE DISPOSED OF IN A MANNER THAT MEETS, LOCAL, COUNTY, STATE AND FEDERAL REQUIREMENTS.
11. THE CONTRACTOR SHALL NOTIFY THE UNDERSIGNED PROFESSIONAL IF FIELD CONDITIONS VARY FROM THAT WHICH IS SHOWN HEREON.
12. MINOR SUBDIVISION WAS APPROVED PER PLANNING BOARD RESOLUTION 2020–08, ADOPTED SEPTEMBER 1, 2020.

LEGEND

- HYDRANT
- VALVE
- MANHOLE
- CURB INLET
- INLET
- WELLHEAD
- STREET LAMP
- PRIVATE LAMP
- UTILITY POLE
- UTILITY POLE & LAMP
- SUPPORT POLE
- UTILITY TOWER
- POST
- SINGLE POST SIGN
- DOUBLE POST SIGN
- PRIVATE MAILBOX
- PUBLIC MAILBOX
- MISCELLANEOUS FEATURE
- DEFINED TREE LOCATION
- UNDEFINED TREE LOCATION
- SHRUB
- SPOT ELEVATION
- SWAMP
- PALM TREE
- FLAG POLE
- HORIZ. & VERT. AERIAL CONTROL
- HORIZ. AERIAL CONTROL
- VERT. AERIAL CONTROL
- OBSCURED AREA
- TREELINE
- BRUSH/SHRUBLINE
- WATER
- SWAMP
- TRAIL
- STONEWALL
- FENCE
- CONSTRUCTION/TEMPORARY FENCE
- GUIDE RAIL
- MAPPING LIMIT
- TOP OF BANK
- TREE TO BE REMOVED
- GENERAL DEMOLITION

DEMOLITION NOTES:

1. PRIOR TO CONSTRUCTION, THE CONTRACTOR SHALL:
   A. THOROUGHLY FAMILIARIZE THEMSELVES WITH SITE CONDITIONS
   B. REVIEW THE SURVEY & SITE PLANS FOR INCONSISTENCIES WITH ACTUAL SITE CONDITIONS.
   C. VERIFY EXISTING STRUCTURES TO REMAIN
   D. VERIFY LOCATION, DEPTH & ELEVATION OF UTILITY CONNECTIONS
   E. INSTALLED SOIL EROSION MEASURES AS PER CERTIFIED PLANS
2. ALL DISTURBED AREAS ON SITE TO BE STABILIZED IN ACCORDANCE WITH THE STANDARDS FOR SOIL EROSION AND SEDIMENT CONTROL IN NEW JERSEY, AND LOCAL REQUIREMENTS OF THE MORRIS COUNTY SOIL CONSERVATION DISTRICT.
3. THE NEW JERSEY ONE CALL SYSTEM SHOULD BE CONTACTED A MINIMUM OF THREE (3) BUSINESS DAYS PRIOR TO ANY EXCAVATION OR SOIL DISTURBANCE ON–SITE OR WITHIN PUBLIC ROW. CALL 811 OR (800)–272–1000.
4. DURING ROW WORK, TRAFFIC TO BE PROTECTED AND MAINTAINED IN ACCORDANCE WITH MUTCD PART VI, AND/OR TOWNSHIP OF VERONA REQUIREMENTS.
5. THE CONTRACTOR SHALL DEMOLISH EXISTING STRUCTURES, APPURTENANCES, AND MATERIALS AS SHOWN ON THE PLANS, AND SHALL BE RESPONSIBLE FOR EXISTING SERVICE DISCONNECTIONS AND DEMOLITION PERMITS.
6. ALL IMPROVEMENTS SHOWN HEREON "TO BE REMOVED" SHALL BE DISPOSED OF IN A MANNER THE MEETS LOCAL, COUNTY AND STATE REQUIREMENTS.

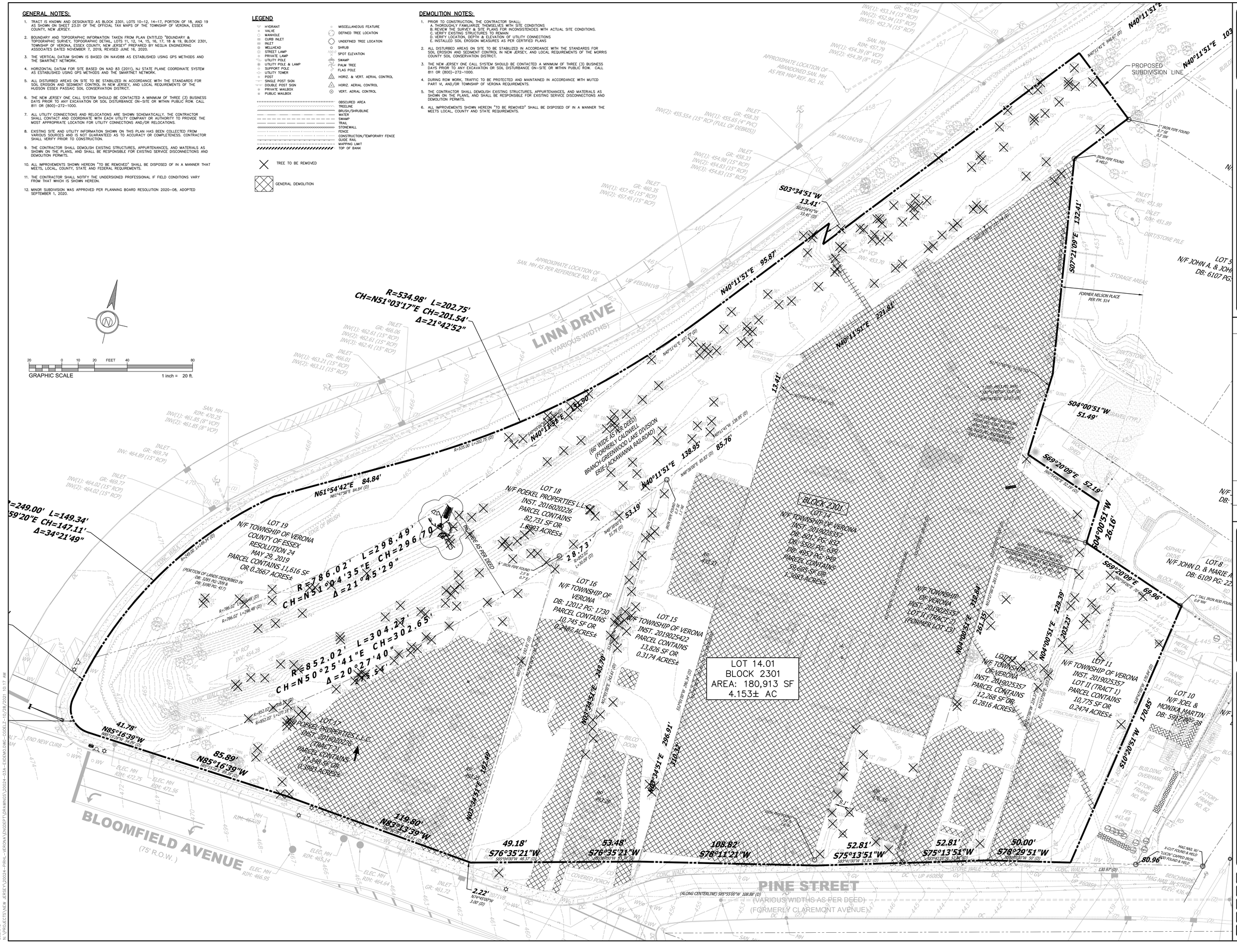

ESE CONSULTANTS
ENGINEERING • PLANNING • SURVEYING • ENVIRONMENTAL
ESE Consultants, Inc.
100 Willow Brook Road • Suite 200 • Freehold, NJ 07728
T: 732-446-8446
New Jersey Certificate of Authorization No. 24GA27999900

DATE: 9/28/21
JAY S. KRUSE
PROFESSIONAL ENGINEER
NEW JERSEY LICENSE
NO. GE34356

REV.	DATE	DESCRIPTION	DRAWN

New Jersey One Call
1 Corporate Place South
PO Box 3481
Piscataway, NJ 08854
1-800-272-1000
or 8-1-1
www.njt-call.org
Know what's below. Call before you dig.

EXISTING FEATURES
AND DEMOLITION PLAN

FINAL MAJOR SITE PLAN

APARTMENTS AT VERONA

BLOCK 2301, LOTS 11, 12, 14–17, PORTION OF 18, AND 19, TAX MAP #23.01
TOWNSHIP OF VERONA, ESSEX COUNTY, NEW JERSEY

DATE: OCT. 28, 2021	SCALE: 1"=20'
DESIGN:	DRAWN:
JOB NO.: 20024	FILE NAME: 20024-03A-EXDEMO
REF. NO.: SD03.01	
SHEET NO.: 3 OF 13	

ESE CTB
N:\PROJECTS\NEW JERSEY\20024-PRHN-VERONA\ENGDEPT\DRAWINGS\20024-03A-EXDEMO.DWG-GORELZ-10/29/2021 10:17 AM

GENERAL NOTES

1. ALL WORK SHALL CONFORM WITH THE LATEST EDITION OF THE FOLLOWING:
   - NJDOT SPECIFICATIONS FOR ROAD AND BRIDGE CONSTRUCTION, 2007 EDITION
   - ESSEX COUNTY DESIGN STANDARDS
   - MUNICIPAL DESIGN STANDARDS
   - N.J. RESIDENTIAL SITE IMPROVEMENT STANDARDS (RSIS)
   - CURRENT MANUFACTURERS SPECIFICATIONS, STANDARDS AND REQUIREMENTS
   - CURRENT, PREVAILING UTILITY COMPANY OR AUTHORITY SPECIFICATIONS, STANDARDS, AND REQUIREMENTS.
2. ALL BARRIER FREE CONSTRUCTION TO BE IN ACCORDANCE WITH THE LATEST STANDARDS OF THE NEW JERSEY UNIFORM CONSTRUCTION CODE, SUBCHAPTER 7: BARRIER FREE SUBCODE AND/OR 2010 ADA STANDARDS, AS APPLICABLE.
3. THE CONTRACTOR IS RESPONSIBLE FOR ALL WORKER SAFETY, TRAINING, AND SAFETY DEVICE USAGE FOR AND DURING THE CONSTRUCTION OF THE IMPROVEMENTS SHOWN ON THIS PLAN.
4. THE CONTRACTOR IS DESIGNATED AS RESPONSIBLE PARTY DURING CONSTRUCTION OF IMPROVEMENTS SHOWN HERON. AS SUCH CONTRACTOR WILL PROVIDE ADEQUATE SAFETY TRAINING, EQUIPMENT, AND OVERSIGHT.
5. THE CONTRACTOR IS RESPONSIBLE FOR ALL REQUIRED PERMITS AND APPROVALS FOR CONSTRUCTION OF THE DEPICTED SITE IMPROVEMENTS.
6. ALL DISTURBED AREAS ON SITE TO BE STABILIZED IN ACCORDANCE WITH THE STANDARDS FOR SOIL EROSION AND SEDIMENT CONTROL IN NEW JERSEY, AND LOCAL REQUIREMENTS OF THE HUDSON ESSEX PASSAIC SOIL CONSERVATION DISTRICT.
7. THE NEW JERSEY ONE CALL SYSTEM SHOULD BE CONTACTED A MINIMUM OF THREE (3) BUSINESS DAYS PRIOR TO ANY EXCAVATION OR SOIL DISTURBANCE ON-SITE OR WITHIN PUBLIC ROW. CALL 811 OR (800)-272-1000.
8. EXISTING SITE AND UTILITY INFORMATION SHOWN ON THIS PLAN HAS BEEN COLLECTED FROM VARIOUS SOURCES AND IS NOT GUARANTEED AS TO ACCURACY OR COMPLETENESS. CONTRACTOR SHALL VERIFY PRIOR TO CONSTRUCTION.
9. ALL TRAFFIC SIGNS AND STRIPING SHALL CONFORM WITH THE MANUAL ON UNIFORM TRAFFIC CONTROL DEVICES (MUTCD), LATEST EDITION.
10. DURING ROW WORK, TRAFFIC TO BE PROTECTED AND MAINTAINED IN ACCORDANCE WITH MUTCD PART VI, LATEST EDITION, AND/OR TOWNSHIP OF VERONA REQUIREMENTS.
11. THE CONTRACTOR TO MATCH EXISTING PAVEMENT SPECIFICATIONS FOR ALL PAVEMENT REPAIRS TO EXISTING ROADWAYS.
12. CONCRETE SHALL BE NJDOT CLASS "B" UNLESS OTHERWISE STATED HEREON OR WITHIN THE CONSTRUCTION DETAILS.
13. THE CONTRACTOR SHALL DEMOLISH EXISTING STRUCTURES, APPURTENANCES, AND MATERIALS AS SHOWN ON THE PLANS, AND SHALL BE RESPONSIBLE FOR EXISTING SERVICE DISCONNECTIONS AND DEMOLITION PERMITS.
14. THE CONTRACTOR SHALL NOTIFY THE UNDERSIGNED PROFESSIONAL IF FIELD CONDITIONS VARY FROM THAT WHICH IS SHOWN HEREON.
15. THIS PLAN SET HAS BEEN PREPARED FOR MUNICIPAL AND AGENCY APPROVALS ONLY. THIS PLAN SHALL NOT BE USED FOR CONSTRUCTION PURPOSES UNTIL MARKED WITH A NOTE STATING "FOR CONSTRUCTION". ALL BUILDING FOOTPRINTS DIMENSIONS SHOWN HEREON ARE APPROXIMATE. FINAL BUILDING FOOTPRINT DIMENSIONS FOR EACH BUILDING SHALL BE FURNISHED AT THE TIME OF APPLICATION FOR A BUILDING PERMIT.
16. ALL BUILDING STRUCTURES SHALL CONFORM TO THE TOWNSHIP OF VERONA BULK ZONING REQUIREMENT FOR APPLICABLE ZONE.
17. ALL MECHANICAL AND ELECTRICAL EQUIPMENT FOR THE BUILDING SHALL BE ROOF MOUNTED AND SHIELDED FROM PUBLIC VIEW WITH EXCEPTION OF METERING..
18. TRASH WITHIN BUILDING A SHALL BE COMPACTED AND STORED WITHIN EXISTING BUILDING IN DEDICATED COMPACTOR ROOM. COLLECTED TRASH SHALL BE PLACED IN INDIVIDUAL CONTAINERS AND WHEELED TO CURB FOR PICK-UP BY WASTE HAULER DURING NORMAL MUNICIPAL COLLECTION SCHEDULE OR BY PRIVATE HAULER.
19. TRASH FOR BUILDING B & C SHALL BE DISPOSED OF WITHIN DUMPSTER CONTAINERS AT THE DESIGNATED TRASH ENCLOSURE. COLLECTED TRASH SHALL BE PICKED UP BY PRIVATE HAULER ON NORMAL OPERATION SCHEDULE.
20. A KNOX BOX SHALL BE INSTALLED NEAR MAIN ENTRANCE TO ALLOW IMMEDIATE ACCESS TO THE BUILDING BY EMERGENCY RESPONSE PERSONNEL.
21. NO PLANTING, BERM, SIGN, FENCE OR OTHER STRUCTURE EXCEEDING 30 INCHES IN HEIGHT SHALL BE LOCATED IN THE SIGHT TRIANGLE.
22. TREES AND OTHER VEGETATION WITHIN THE DEPICTED SIGHT DISTANCE TRIANGLE SHALL BE TRIMMED OR REMOVED TO PROVIDE CLEAR SIGHT DISTANCE.
23. SEE LANDSCAPE PANS FOR LAYOUT AND DETAILS FOR PLAY STRUCTURE, PATIO & PLAY AREAS, AND ENTRANCE AREA.

LEGEND

- EXISTING BUILDING
- PROPOSED BUILDING
- EXISTING TREE LINE
- PROPOSED TREE LINE
- OUTBOUND LINE
- EXISTING R.O.W.
- EXISTING PROPERTY LINE
- PROPOSED CENTER LINE
- SETBACK LINE
- EXISTING CARTWAY
- PROPOSED CARTWAY
- PROPOSED SIDEWALK WITH ADA ACCESSIBLE RAMP AND DETECTABLE WARNING SURFACE
- STOP SIGN (R1-1)
- HANDICAP SIGN (R7-8)
- ONE WAY SIGN (R6-1R)
- NO LEFT TURN SIGN (R3-2)
- NUMBER OF PARKING SPACES
- LIGHT POST

GRAPHIC SCALE 1 inch = 20 ft.

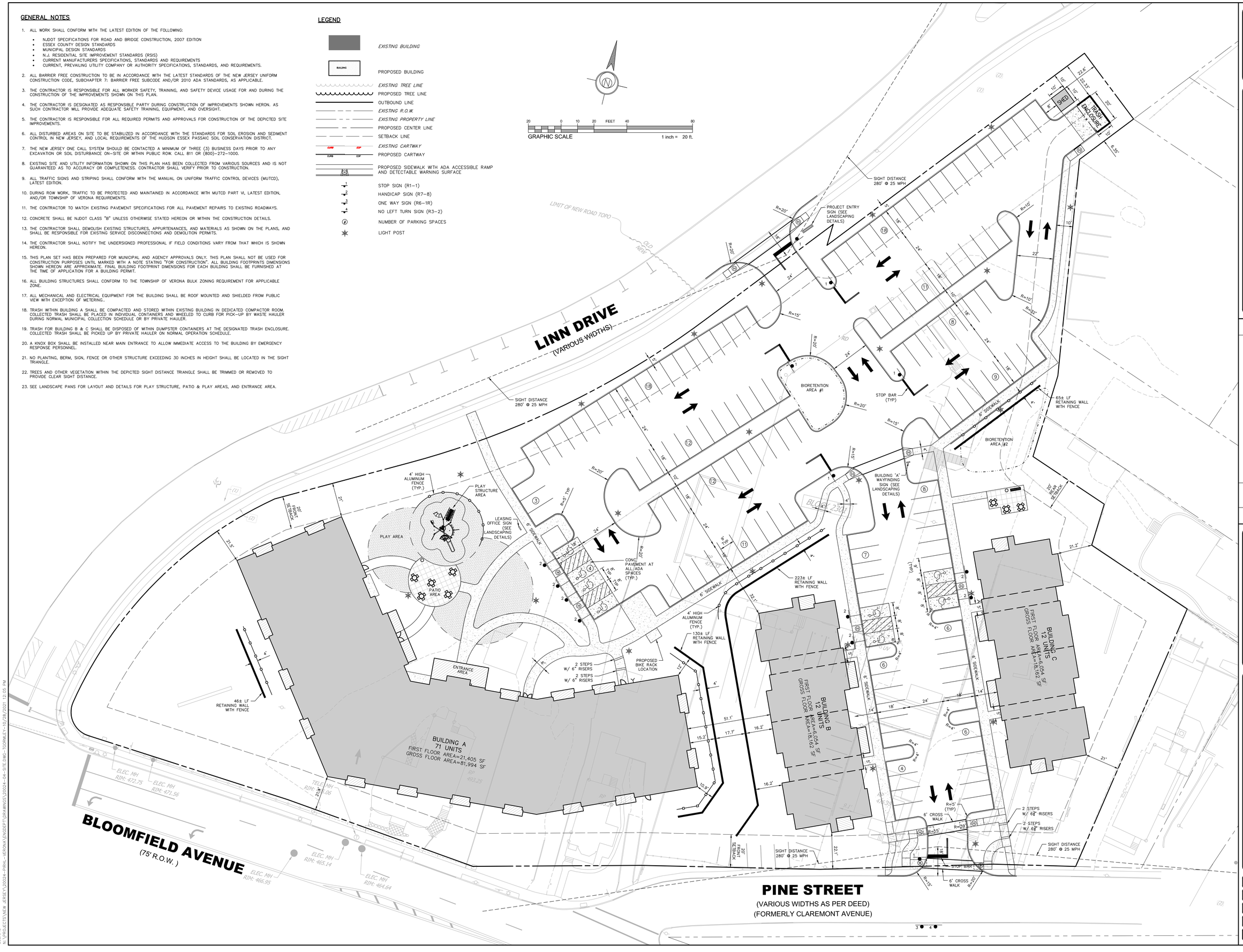

DATE: 10/28/21
JAY S. KRUSE
PROFESSIONAL ENGINEER
NEW JERSEY LICENSE
NO. GE041356

ESE CONSULTANTS
ENGINEERING • PLANNING • SURVEYING • ENVIRONMENTAL
ESE Consultants, Inc.
100 Willow Brook Road • Suite 200 • Freehold, NJ 07728
T: 732-446-8446
New Jersey Certificate of Authorization No. 24GA27999900

REV.	DATE	DESCRIPTION	DRAWN

New Jersey One Call
1 Corporate Place South
Suite 103
Piscataway, NJ 08854
1-800-272-1000
or 8-1-1
www.nj-1-call.org
Know what's below. Call before you dig.

SITE LAYOUT AND DIMENSION PLAN

FINAL MAJOR SITE PLAN

APARTMENTS AT VERONA

BLOCK 2301, LOTS 11, 12, 14-17, PORTION OF 18, AND 19, TAX MAP #23.01
TOWNSHIP OF VERONA, ESSEX COUNTY, NEW JERSEY

DATE: OCT. 28, 2021	SCALE: 1"=20'
DESIGN: JSK	DRAWN: TJG
JOB NO.: 20024	FILE NAME: 20024-04-SITE
REF. NO.: SD04.01	
SHEET NO.: 4 OF 13	

ESE.CTB
N:\PROJECTS\NEW JERSEY\20024-PIRHL-VERONA\ENGDPT\DRAWINGS\20024-04-SITE.DWG-TGORNLEY-10/28/2021 12:05 PM

GRADING PLAN NOTES

1. MATERIAL PLACED IN FILL SHALL BE FREE OF DETRIMENTAL AMOUNTS OF SOD, ROOTS, FROZEN SOIL, STONES MORE THAN SIX (6) INCHES, AND OTHER OBJECTIONABLE MATERIAL.
2. DRAIN FILL SHALL BE KEPT FROM BEING CONTAMINATED BY ADJACENT SOIL MATERIALS DURING PLACEMENT BY EITHER PLACING IT IN A CLEANLY EXCAVATED TRENCH, OR BY KEEPING THE DRAIN AT LEAST ONE FOOT ABOVE THE ADJACENT EARTH FILL.
3. SELECTED DRAIN FILL AND BACKFILL MATERIAL SHALL BE PLACED AROUND STRUCTURES AND PIPE CONDUITS AT ABOUT THE SAME RATE ON ALL SIDES TO PREVENT DAMAGE FROM UNEQUAL LOADING. FILL MATERIAL SHALL BE PLACED AND SPREAD BEGINNING AT THE LOWEST POINT IN THE FOUNDATION, AND THEN BROUGHT UP IN THE CONTINUOUS HORIZONTAL LAYERS THICK ENOUGH THAT THE REQUIRED COMPACTION CAN BE OBTAINED.
4. THE DISTRIBUTION AND GRADATION OF MATERIALS SHALL BE SUCH THAT NO LENSES, POCKETS, STREAKS, OR LAYERS OF MATERIAL SHALL DIFFER SUBSTANTIALLY IN TEXTURE OR GRADATION FROM SURROUNDING MATERIAL.
5. THE MOISTURE CONTENT OF THE FILL MATERIAL SHALL BE ADEQUATE FOR OBTAINING THE DESIRED COMPACTION. MATERIAL THAT IS TOO WET SHALL BE DRIED TO MEET THIS REQUIREMENT, AND MATERIAL THAT IS TOO DRY SHALL BE WETTED AND MIXED UNTIL THE REQUIREMENT IS MET. CONSTRUCTION EQUIPMENT SHALL BE OPERATED OVER EACH LAYER OF FILL TO ENSURE THAT THE REQUIRED LEVEL OF COMPACTION IS OBTAINED.
6. FILL ADJACENT TO STRUCTURES, PIPE CONDUITS, OR DRAIN FILL SHALL BE COMPACTED TO A DENSITY EQUIVALENT TO THAT OF THE SURROUNDING FILL BY HAND TAMPING, OR BY USING MANUALLY DIRECTED POWER TAMPERS OR PLATE VIBRATORS. FILL ADJACENT TO CONCRETE STRUCTURES SHALL NOT BE COMPACTED UNTIL THE CONCRETE HAS HAD TIME TO GAIN ENOUGH STRENGTH TO SUPPORT THE LOAD.
7. EMBANKMENT & LOT GRADES SHALL NOT EXCEED 3 HORIZONTAL TO 1 VERTICAL.
8. PROVIDE A MINIMUM OF 2% SLOPE IN ALL SHEET FLOW LAWN AREAS.
9. MINIMUM SLOPE OF 1.5% SHALL BE PROVIDED IN YARD SWALES.
10. THE PROPOSED LAWN AREAS WILL BE GRADED WITH LIGHT-WEIGHT CONSTRUCTION EQUIPMENT.
11. ANY UNSUITABLE MATERIAL ENCOUNTERED (UNCONTROLLED FILL, ETC.) TO BE COMPLETELY REMOVED FROM WITHIN AND UP TO FIVE (5) FEET BEYOND THE LIMIT OF THE BUILDING FOOTPRINT AND PAVEMENT AREAS AS DIRECTED BY THE GEOTECHNICAL ENGINEER AS IDENTIFIED IN THE GEOTECHNICAL REPORT. PIRHL CONTRACTORS IS NOT RESPONSIBLE FOR UNFORESEEN SOIL ISSUES THAT ARE NOT IDENTIFIED BY PRIOR TESTING.
12. DC = FLUSH CURB TO BE PROVIDED AT ALL ADA ACCESSIBLE RAMP LOCATIONS.

BACKFILLING AND FILL REQUIREMENTS SHALL BE PERFORMED IN ACCORDANCE WITH THE FOLLOWING:

A. BACKFILL SHALL CONSIST OF SUITABLE ON-SITE MATERIAL OR IMPORTED SELECT FILL MEETING THE FOLLOWING UCS CLASSIFICATION: GW, GP, GW-GM, GP-GM, SW, SP, SW-SM, SP-SM, OR NJDOT SOIL AGGREGATE CLASSIFICATION: 1-13, 1-5.

B. BACKFILL SHALL BE FREE OF CLAY MATERIAL, STUMPS, TREE PARTS, TRASH, DEBRIS OR MATERIAL OVER 2" IN SIZE.

C. BACKFILL SHALL BE COMPACTED IN A MAXIMUM OF EIGHT (8) INCH LIFTS TO 95% OF THE MAXIMUM IN-SITU DRY DENSITY OF THE MATERIAL BEING PLACED FOR AREAS BELOW STRUCTURES, ROADWAYS, SIDEWALKS, PIPING.

D. BACKFILL SHALL BE COMPACTED IN A MAXIMUM OF ONE (1) FT. LIFTS TO 90% OF THE MAXIMUM IN-SITU DRY DENSITY OF THE MATERIAL BEING PLACED FOR ALL OTHER AREAS.

1. CONTRACTOR SHALL CONTACT THE TOWNSHIP ENGINEER TO DISCUSS SAMPLING FREQUENCY AND ANALYTICAL PARAMETERS IF/ONCE A MATERIAL SOURCE HAS BEEN SELECTED. THE RESULTS OF THIS TESTING, IF NECESSARY, SHOULD BE PROVIDED TO THE TOWNSHIP ENGINEER FOR REVIEW PRIOR TO IMPORTING TO THE SITE.
2. CONTRACTOR SHALL PROVIDE ARCHITECT/ENGINEER WITH SOIL TESTING RESULTS FOR BACKFILL MATERIAL INCLUDING, BUT NOT LIMITED TO, UCS CLASSIFICATION, OPTIMUM MOISTURE CONTENT, MAXIMUM DRY DENSITY AND SCREENING FOR PESTICIDES AND CONTAMINANTS IN ACCORDANCE WITH THE NJDEP PRIORITY POLLUTANT LIST.

E. COMPACTION SHALL BE MONITORED BY CONTRACTOR'S GEOTECHNICAL ENGINEER, UTILIZING THE DENSITY CONTROL METHOD PER SECTION 203.10 OF THE NJDOT STANDARD SPECIFICATIONS FOR ROAD AND BRIDGE CONSTRUCTION, LATEST EDITION. A MINIMUM OF TWO (2) MEASUREMENTS SHALL BE TAKEN PER LIFT FOR EACH STRUCTURE/AREA BEING BACKFILLED. COMPACTION TESTING RESULTS SHALL BE SUBMITTED TO THE ARCHITECT/ENGINEER FOR REVIEW PRIOR TO PERFORMING ABOVE GRADE ACTIVITIES ON THE AREA RECEIVING BACKFILL.

LEGEND

100	PROPOSED CONTOUR
100.0	PROPOSED SPOT ELEVATION
	PROPOSED TREELINE
100	EXISTING CONTOUR
100.0	EXISTING SPOT ELEVATION
	EXISTING TREELINE
FF	FINISHED FLOOR ELEVATION
100	PROPOSED STORM STRUCTURE NUMBER
100	PROPOSED SANITARY SEWER STRUCTURE NUMBER

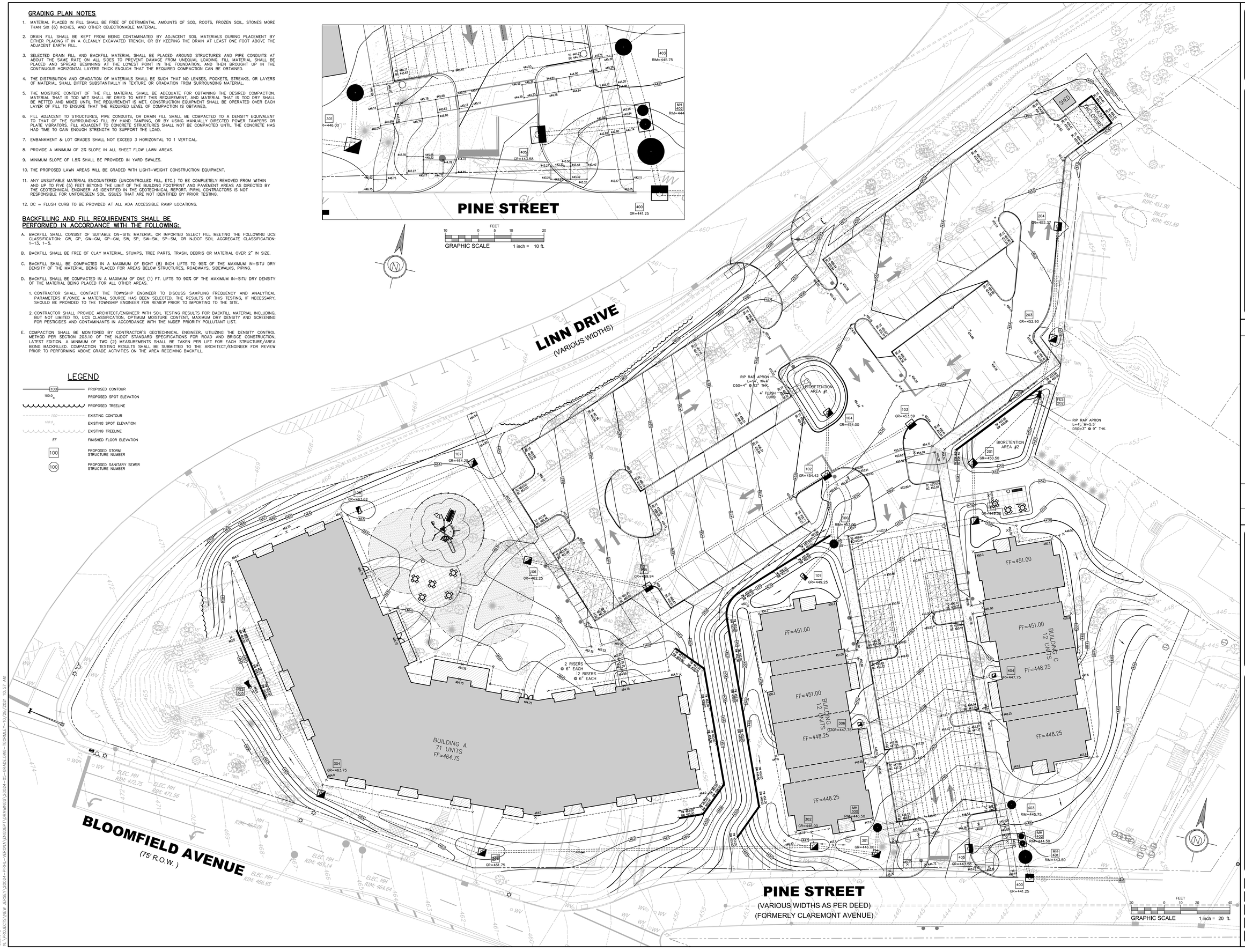

ESE CONSULTANTS
ENGINEERING • PLANNING • SURVEYING • ENVIRONMENTAL
ESE Consultants, Inc.
100 Willow Brook Road • Suite 200 • Freehold, NJ 07728
T: 732-446-8446
New Jersey Certificate of Authorization No. 24GA27999900
DATE: 12/28/21
JAY S. KRUSE
PROFESSIONAL ENGINEER
NEW JERSEY LICENSE
NO. GE041356

REV.	DATE	DESCRIPTION	DRAWN

New Jersey One Call
1 Corporate Place South
PO Box 3481
Piscataway, NJ 08854
1-800-272-1000
or 8-1-1
www.njt-call.org
Know what's below. Call before you dig.

GRADING PLAN

FINAL MAJOR SITE PLAN
APARTMENTS AT VERONA
BLOCK: 2301, LOTS 11, 12, 14-17, PORTION OF 18, AND 19, TAX MAP #23.01
TOWNSHIP OF VERONA, ESSEX COUNTY, NEW JERSEY

DATE: OCT. 28, 2021	SCALE: 1"=20'
DESIGN: JSK	DRAWN: TJG
JOB NO.: 20024	FILE NAME: 20024-05-GRADE
REF. NO.: SD05.01	
SHEET NO.: 5 OF 13	

ESE CTB
N:\PROJECTS\NEW JERSEY\20024-PIRHL-VERONA\ENGDEPT\DRAWINGS\20024-05-GRADE.DWG-TGORNLEY-10/28/2021 10:57 AM

UTILITY NOTES

1. GAS, ELECTRIC, TELEPHONE, CABLE TV AND STREET LIGHTING SHALL BE INSTALLED UNDERGROUND IN ACCORDANCE WITH REGULATION OF LOCAL UTILITY COMPANY & THE TOWNSHIP OF VERONA AND WILL BE WITHIN AN EASEMENT OR DEDICATED PUBLIC RIGHT OF WAY.
2. SEPARATE UTILITY PERMIT APPLICATIONS WILL BE REQUIRED FOR ANY PROPOSED UTILITY WORK (GAS, ELECTRIC, WATER, SEWER, ETC.) IN NJDOT R.O.W.
3. POTABLE WATER SERVICE & SANITARY SEWER SERVICE ON SITE TO BE PRIVATE.
4. ALL MATERIALS, METHODS AND DETAILS OF CONSTRUCTION FOR SANITARY SEWER SHALL CONFORM TO THE REGULATIONS OF THE TOWNSHIP OF VERONA, ESSEX COUNTY UTILITIES AUTHORITY, AND THE STATE OF NEW JERSEY.
5. ALL SANITARY SEWER AND WATER MAIN INSTALLATION SHALL CONFORM TO THE TOWNSHIP OF VERONA SANITARY SEWER AND WATER MAIN CONSTRUCTION STANDARDS.
6. THE CONTRACTOR(S) SHALL DETERMINE THE LOCATION OF EXISTING STRUCTURES AND UTILITIES ABOVE AND BELOW GROUND BEFORE BEGINNING CONSTRUCTION IN ORDER TO AVOID INTERFERENCE WITH SAME.
7. ALL ON SITE WATER MAINS TO BE 6" OR 8" CEMENT LINED DUCTILE IRON PIPE CONFORMING TO A.N.S.I. A 21.51 (AWWA C151), CLASS 52, WITH EITHER MECHANICAL OR PUSH-UP JOINTS.
8. ALL ON SITE SANITARY SEWER GRAVITY MAINS SHALL BE 8" POLYVINYL CHLORIDE PIPE TYPE PSM, SDR-35, CONFORMING TO ASTM D3034 WITH PUSH-UP JOINTS (UNLESS OTHERWISE SPECIFIED ON THE PLANS).
9. PROVIDE TEN (10) FOOT MINIMUM HORIZONTAL SEPARATION BETWEEN SANITARY SEWER MAINS AND WATER MAINS OR LOCATE WATER MAIN EIGHTEEN (18) INCHES ABOVE SEWER MAIN IN A SEPARATE TRENCH. MINIMUM VERTICAL CLEARANCE BETWEEN WATER MAINS AND OTHER PIPES SHALL BE NO LESS THAN TWELVE (12) INCHES.
10. AT SANITARY SEWER MAIN AND WATER MAIN CROSSINGS, CONSTRUCT SANITARY SEWER MAIN A MINIMUM OF EIGHTEEN (18) INCHES BELOW WATER MAIN OR ENCASE SANITARY SEWER MAIN IN CONCRETE SIX (6) INCHES THICK FOR A DISTANCE OF TEN (10) FEET ON BOTH SIDES OF WATER MAIN. DUCTILE IRON PIPE MAY BE SUBSTITUTED FOR CONCRETE ENCASEMENT.
11. PROVIDE EIGHTEEN (18) INCHES OF CLEARANCE BETWEEN STORM DRAINS CROSSING SANITARY SEWER MAINS.
12. PROVIDE FOUR (4) FEET MINIMUM COVER OVER WATER MAINS AND PROVIDE THREE (3) FEET MINIMUM COVER OVER SEWER LATERALS AT CURB LINE.
13. FIRE HYDRANT LOCATIONS SHALL BE APPROVED BY LOCAL FIRE OFFICIAL.
14. STORM WATER MANAGEMENT FOR SITE SHALL MEET LOCAL, COUNTY AND STATE REQUIREMENTS.
15. ALL STORM DRAIN PIPES SHALL BE REINFORCED CONCRETE, CLASS III, WALL "B" UNLESS NOTED OTHERWISE, AND CONFORM TO THE REQUIREMENTS OF ASTM C76, JOINT MATERIAL SHALL CONFORM TO ASTM C443.
16. THE NEW JERSEY ONE CALL SYSTEM SHOULD BE CONTACTED A MINIMUM OF THREE (3) BUSINESS DAYS PRIOR TO ANY EXCAVATION OR SOIL DISTURBANCE ON-SITE OR WITHIN PUBLIC ROW. CALL 811 OR (800)-272-1000.
17. ALL UTILITY CONNECTIONS AND RELOCATIONS ARE SHOWN SCHEMATICALLY. THE CONTRACTOR SHALL CONTACT AND COORDINATE WITH EACH UTILITY COMPANY OR AUTHORITY TO PROVIDE THE MOST APPROPRIATE LOCATION FOR UTILITY CONNECTIONS AND/OR RELOCATIONS.
18. EXISTING SITE AND UTILITY INFORMATION SHOWN ON THIS PLAN HAS BEEN COLLECTED FROM VARIOUS SOURCES AND IS NOT GUARANTEED AS TO ACCURACY OR COMPLETENESS. CONTRACTOR SHOULD FIELD VERIFY PRIOR TO CONSTRUCTION.
19. THE VERTICAL DATUM SHOWN IS BASED ON NAVD88 AS ESTABLISHED USING GPS METHODS AND THE SMARTNET NETWORK
20. BACKFLOW PREVENTION DEVICES FOR DOMESTIC AND FIRE SERVICE CONNECTIONS SHALL BE PROVIDED PER TOWNSHIP OF VERONA STANDARDS. ANY REDUCED PRESSURE ZONE ASSEMBLIES (RPZ) SHALL BE LOCATED IN AN INTERNAL UTILITY ROOM WITH FLOOR DRAIN.
21. WATER VALVES 16" DIAMETER OR GREATER SHALL BE BUTTERFLY TYPE.
22. ALL STORM AND SANITARY SEWER CASTINGS, MANHOLES, CATCH BASINS, FRAMES, GRATES, AND OTHER COMPONENTS SHALL BE AMERICAN MADE AND BEAR APPROVAL/CERTIFICATION FROM THE NJDOT.

20 0 10 20 FEET 40 80

GRAPHIC SCALE 1 inch = 20 ft.

LEGEND

- PROPOSED FIRE HYDRANT
- PROPOSED SANITARY MANHOLE
- W — PROPOSED WATER MAIN
- W W W — PROPOSED WATER LATERAL
- S S S — PROPOSED SANITARY SEWER LATERAL
- PROPOSED ROAD INLET
- PROPOSED YARD INLET
- PROPOSED HEADWALL
- PROPOSED STORM MANHOLE
- PROPOSED FLARED END SECTION
- PROPOSED RIP-RAP

PROJECTED/AVERAGE DAILY SEWER FLOW

PROJECTED SEWER FLOW per N.J.A.C. 7:14A-23.3(g)

COMMUNITY SPACE = 1296 SF x 0.10 GPD/SF=	130 GPD
1-BR = 16 units x 150 GPD/unit =	2,400 GPD
2-BR = 53 units x 225 GPD/unit =	11,925 GPD
3-BR = 26 units x 300 GPD/unit =	7,800 GPD
TOTAL AVERAGE DAILY FLOW (ADF) =	22,255 GPD
PEAK DAILY FLOW (2xADF) =	44,510 GPD (30.9 GPM)

EXISTING PINE STREET MIAIN CAPACITY

$$Q = \frac{1.486}{n} \times A \times R^{2/3} \times S^{1/2}$$

where,

Q = capacity, cfs (1/2 full)

n = Mannings roughness coefficient (VCP = 0.015)

A = flow area (1/2 full) = 0.175 SF

R = hydraulic radius = A/WP = 0.167

S = pipe slope = 0.059 ft/ft minimum

$$Q = \frac{1.486}{0.015} \times 0.175 \times 0.167^{2/3} \times 0.059^{1/2} = \mathbf{1.27\ cfs}$$

$$Q = 1.27\ cfs = \mathbf{570\ gpm}$$

INLET TYPES	
INLET #	TYPE
101	'A'
102	'B'
103	'B'
104	'E'
105	'B'
106	'E'
107	'E'
108	'A'
200	'E'
201	'E'
203	'E'
204	'B'
302	'E'
303	'E'
304	'E'
305	'E'
307	12" YARD
400	'B'
404	12" YARD
405	'B' (8")

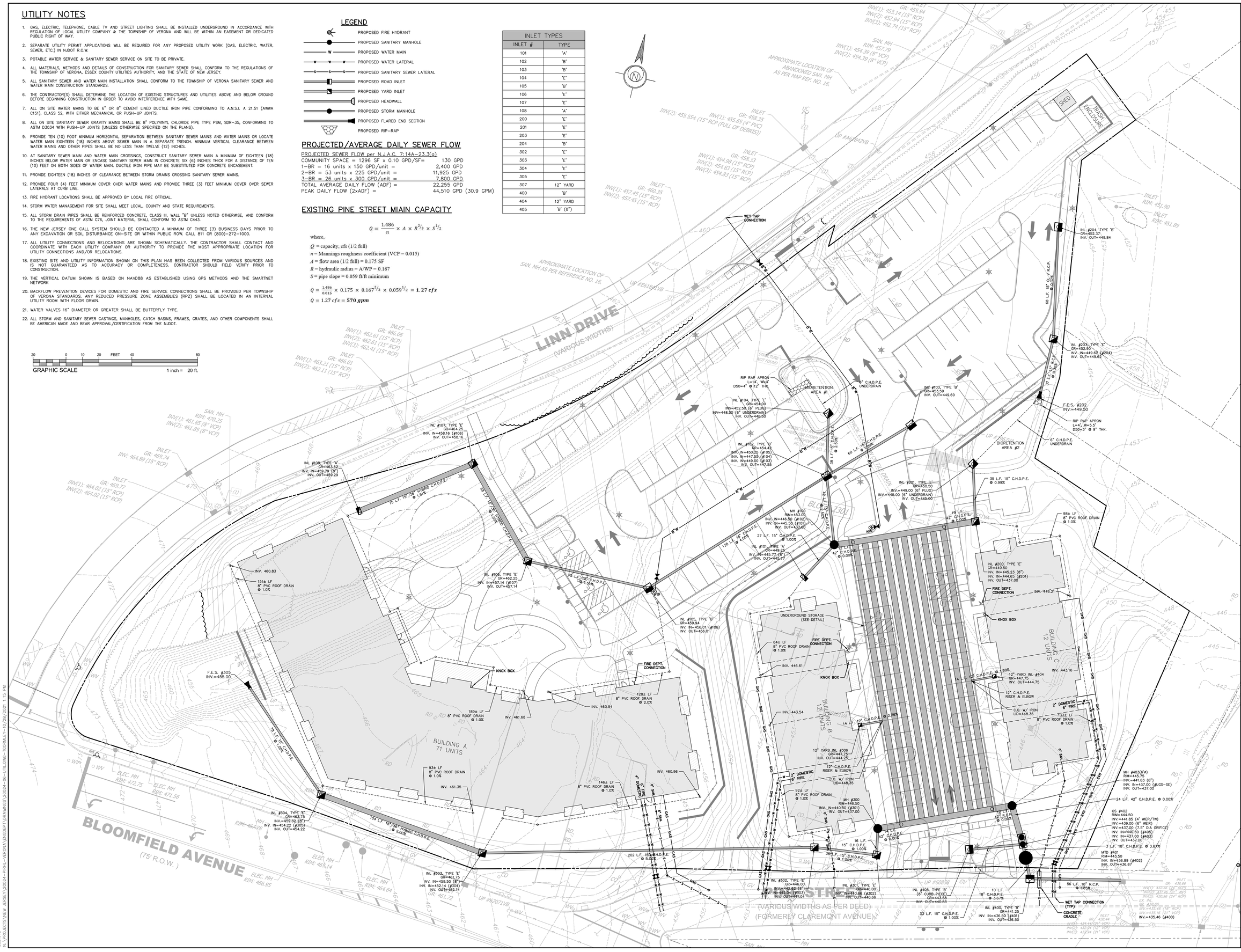

ESE CONSULTANTS
ENGINEERING • PLANNING • SURVEYING • ENVIRONMENTAL
ESE Consultants, Inc.
100 Willow Brook Road • Suite 200 • Freehold, NJ 07728
T: 732-446-8446
New Jersey Certificate of Authorization No. 24GA27999900

DATE: 12/18/21
JAY S. KRUSE
PROFESSIONAL ENGINEER
NEW JERSEY LICENSE
NO. GE041356

REV.	DATE	DESCRIPTION	DRAWN

New Jersey One Call
5 Corporate Place South
PO Box 365
Piscataway, NJ 08854
1-800-272-1000
or 8-1-1
www.njt-call.org

811 Know what's below. Call before you dig.

UTILITY PLAN

FINAL MAJOR SITE PLAN
APARTMENTS AT VERONA
BLOCK 2301, LOTS 11, 12, 14-17, PORTION OF 18, AND 19, TAX MAP #23.01
TOWNSHIP OF VERONA, ESSEX COUNTY, NEW JERSEY

DATE: OCT. 28, 2021	SCALE: 1"=20'
DESIGN: JSK	DRAWN: TJG
JOB NO.: 20024	FILE NAME: 20024-06-UTIL
REF. NO.: SD06.01	
SHEET NO.: 6 OF 13	

ESE CTB
N:\PROJECTS\NEW JERSEY\20024-PRHL-VERONA\ENGDEPT\DRAWINGS\20024-06-UTIL.DWG-TGORMLEY-10/28/2021 1:15 PM

RA61 > TRADITIONAL ALUMINUM POLE

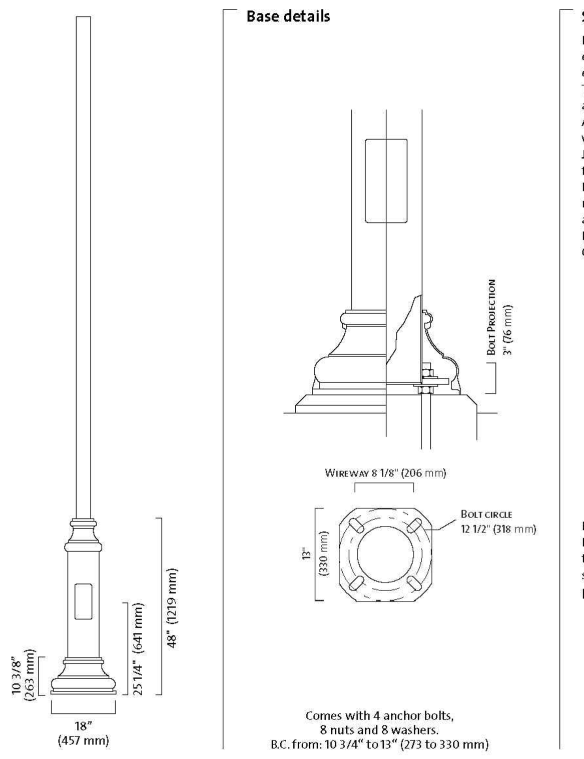

Specifications:

Pole: made from a one-piece, seamless 4" round (102 mm) tube of extruded aluminum, welded over a 8 5/8" round (219 mm) seamless extruded-aluminum pole base.
The assembly is welded to both the top and bottom of a cast aluminum anchor plate.
A 4 1/2" by 10" (114 by 254 mm) maintenance opening is complete with cover and copper ground lug.
Joint cover: made from two pieces of cast aluminum mechanically fastened to the junction with stainless steel hardware.
Base cover: decorative base cover made from cast-aluminum pieces mechanically assembled together with stainless steel hardware around base of the pole.
Finish: See page 142 for Finish details.
Options:

- **DE:** Pole base buried 5' (1524 mm) in the ground (see page 133).
- **LS:** Provision for loudspeaker outlet (see page 132)
- **PH7:** Button-type photoelectric cell (specify operating voltage)
- **PH8:** Quarter-turn type photoelectric cell (specify operating voltage)
- **DR:** Duplex receptacle (120V line voltage. only)
- **GFI:** DR with common ground fault interrupter (120V line voltage only)
- **BA:** Banner arm (see page 136)
- **PS:** Plant support (see page 137)
- **MPL:** Mid-pole luminaire

Note: The recommended method for calculating EPA (Effective Projected Area) is in accordance with AASHTO 2001 standards: for three seconds, the pole is tested in wind gusts equivalent to the strongest winds on record over the past 50 years, and with a 50 pound load (22.7 kg) placed at 1 foot (305 mm) above its center.

CATALOG NUMBER	NOMINAL HEIGHT (ft)	(m)	TENON SECTION (in)	(mm)	WALL THICKNESS (in)	(mm)	WEIGHT (lbs)	(kg)	EPA RATING 90 MPH (sq.ft)	110 MPH (sq.ft)	120 MPH (sq.ft)	150 MPH (sq.ft)	ANCHOR BOLTS (in)	(mm)
RA61F-8	8	2.44	4	102	0.125	3.2	34	15	17.09	11.53	9.67	6.2	3/4-20	19-508
RA61U-8	8	2.44	4	102	0.226	5.7	41	19	30	20.59	17.35	11.2	3/4-20	19-508
RA61F-10	10	3.05	4	102	0.125	3.2	38	17	12.26	8.04	6.67	4.2	3/4-20	19-508
RA61U-10	10	3.05	4	102	0.226	5.7	47	21	22.1	14.79	12.39	7.92	3/4-20	19-508
RA61F-12	12	3.66	4	102	0.125	3.2	42	19	9.15	5.79	4.71	2.92	3/4-20	19-508
RA61U-12	12	3.66	4	102	0.226	5.7	53	24	16.94	11.12	9.24	5.84	3/4-20	19-508
RA61F-13	13	3.97	4	102	0.125	3.2	43	20	7.95	4.92	3.97	2.39	3/4-20	19-508
RA61U-13	13	3.97	4	102	0.226	5.7	56	25	15.01	9.75	8.05	5.05	3/4-20	19-508
RA61F-14	14	4.27	4	102	0.125	3.2	45	20	6.96	4.17	3.3	1.96	3/4-20	19-508
RA61U-14	14	4.27	4	102	0.226	5.7	60	27	13.37	8.58	7.02	4.38	3/4-20	19-508
RA61F-15	15	4.57	4	102	0.125	3.2	47	21	6.08	3.5	2.72	1.57	3/4-20	19-508
RA61U-15	15	4.57	4	102	0.226	5.7	63	29	11.96	7.54	6.14	3.77	3/4-20	19-508
RA61F-16	16	4.88	4	102	0.125	3.2	49	22	5.32	2.94	2.21	1.22	3/4-20	19-508
RA61U-16	16	4.88	4	102	0.226	5.7	66	30	10.77	6.68	5.38	3.27	3/4-20	19-508
RA61W-16	16	4.88	4	102	0.318	8.1	103	47	15.16	9.69	7.93	4.93	3/4-20	19-508
RA61U-18	18	5.49	4	102	0.226	5.7	72	33	8.5	5.02	3.95	2.31	3/4-27	19-686
RA61W-18	18	5.49	4	102	0.318	8.1	111	50	12.21	7.58	6.12	3.71	3/4-27	19-686
RA61U-20	20	6.10	4	102	0.226	5.7	79	36	6.7	3.71	2.8	1.53	3/4-27	19-686
RA61W-20	20	6.10	4	102	0.318	8.1	120	54	9.85	5.9	4.67	2.74	3/4-27	19-686

Note: Philips Lumec reserves the right to modify the above details to reflect changes in the cost of materials and/or production and/or design without prior notice.

PHILIPS LUMEC

Dimensions

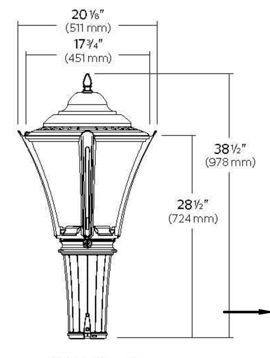

EPA: 1.97 sq ft
Weight: 31.1 lbs (14.1 kg)

LED Wattage and Lumen Values for 3000K & 4000K fixtures

Ordering Code:	Total LEDs	System current (mA)	Average System Watts¹ (W)	LE2 Lumen Output²	LE2 Efficacy (LPW)	LE2 BUG Rating	LE3 Lumen Output²	LE3 Efficacy (LPW)	LE3 BUG Rating	LE3W Lumen Output²	LE3W Efficacy (LPW)	LE3W BUG Rating	LE4 Lumen Output²	LE4 Efficacy (LPW)	LE4 BUG Rating	LE5 Lumen Output²	LE5 Efficacy (LPW)	LE5 BUG Rating
MPTR 4000K																		
35W32LED4K-G2	32	350	37	3462	93.6	B1-U0-G1	3624	97.9	B1-U0-G1	3610	97.6	B1-U0-G1	3650	98.6	B1-U0-G1	3695	99.9	B3-U0-G1
55W32LED4K-G2	32	530	56	4966	88.8	B1-U0-G1	5198	93.0	B1-U0-G1	5178	92.6	B1-U0-G2	5235	93.6	B1-U0-G2	5300	94.8	B3-U0-G1
72W32LED4K-G2	32	700	70	6263	89.1	B1-U0-G1	6556	93.3	B1-U0-G2	6531	92.9	B1-U0-G2	6603	93.9	B1-U0-G2	6684	95.1	B3-U0-G2
97W32LED4K-G2	32	1050	104	8636	82.8	B2-U0-G2	9040	86.7	B1-U0-G2	9005	86.3	B1-U0-G2	9105	87.3	B1-U0-G2	9217	88.4	B4-U0-G2
55W48LED4K-G2	48	350	54	5255	96.6	B1-U0-G1	5349	98.3	B1-U0-G1	5422	99.7	B1-U0-G2	5362	98.6	B1-U0-G2	5659	104.0	B3-U0-G1
80W48LED4K-G2	48	530	81	7538	92.7	B1-U0-G1	7673	94.4	B1-U0-G2	7777	95.7	B1-U0-G2	7691	94.6	B1-U0-G2	8117	99.8	B3-U0-G2
108W48LED4K-G2	48	700	105	9507	90.2	B2-U0-G2	9677	91.8	B2-U0-G2	9808	93.1	B2-U0-G2	9700	92.0	B2-U0-G2	10237	97.1	B4-U0-G2
140W48LED4K-G2	48	1050	157	13109	83.8	B2-U0-G2	13344	85.3	B2-U0-G2	13525	86.4	B2-U0-G3	13376	85.5	B2-U0-G2	14116	90.2	B4-U0-G2
70W64LED4K-G2	64	350	73	7007	96.0	B1-U0-G1	7132	97.7	B1-U0-G2	7229	99.0	B1-U0-G2	7150	97.9	B1-U0-G2	7545	103.4	B3-U0-G2
110W64LED4K-G2	64	530	105	10050	95.7	B2-U0-G2	10231	97.4	B2-U0-G2	10369	98.8	B2-U0-G2	10255	97.7	B2-U0-G2	10822	103.1	B4-U0-G2
90W80LED4K-G2	80	350	91	8759	96.6	B2-U0-G2	8916	98.3	B1-U0-G2	9036	99.6	B2-U0-G2	8937	98.5	B1-U0-G2	9431	104.0	B4-U0-G2
135W80LED4K-G2	80	530	136	12563	92.7	B2-U0-G2	12788	94.4	B2-U0-G2	12962	95.7	B2-U0-G2	12819	94.6	B2-U0-G2	13528	99.8	B4-U0-G2

Actual performance may vary due to installation variables including optics, mounting/ceiling height, dirt depreciation, light loss factor, etc.; highly recommended to confirm performance with a layout - contact Applications at outdoorlighting.applications@philips.com.
Note: Some data may be scaled based on tests of similar. But not identical luminaires.
MetroScape-MPTR-spec 01/18 page 2 of 5

MPTR MetroScape LED post top

Urban

Luminaire Schedule

Symbol	Quantity	Location	Manufacturer	Lamp Type	Mounting Ht.	Catalog Number
△3	14	Parking Lot	Philips Lumec	LED (Type 3W)	15 ft	MPTR-70W64LED4K-G2-LE3W
△5	8	Parking Lot	Philips Lumec	LED (Type 5)	15 ft	MPTR-70W64LED4K-G2-LE5

Calculation Summary

Description	Calculation Type	Units	Min. Provided	Avg. Proposed
Parking Lot	Illuminance	Fc	0.5	1.5

NOTES

1. SEE ARCHITECTURAL PLANS PREPARED BY WALLACE ROBERTS & TODD ARCHITECT FOR BUILDING MOUNTED LIGHTING AT ENTRANCE WAYS AND DOOR LOCATIONS. ILLUMINATION FOR BUILDING MOUNTED LIGHT NOT SHOWN ON THIS PLAN.
2. SEE LANDSCAPE PLANS PREPARED BY MELLILO+BAUER ASSOCIATES, INC. FOR ACCENT LIGHTING AROUND PATHWAYS, WALKWAYS, ENTRANCE WAYS AND SITE AMENITIES. ILLUMINATION FOR ACCENT LIGHTING NOT SHOWN ON THIS PLAN.
3. ILLUMINATION LEVEL (IN FOOTCANDLES) = +0.5
4. LIGHTING FIXTURE, LAMP AND POLE SHOWN ARE FOR GENERAL GUIDANCE ON LIGHTING TYPE AND ILLUMINATION. SUBSTITUTIONS OR EQUALS ARE POSSIBLE AND SHALL PROVIDE THE SAME OR GREATER ILLUMINATION LEVELS AS SHOWN. ALL SUBSTITUTIONS SHALL BE SUBMITTED TO THE TOWNSHIP ENGINEER FOR APPROVAL OF ILLUMINATION LEVELS PRIOR TO ORDERING AND INSTALLATION.

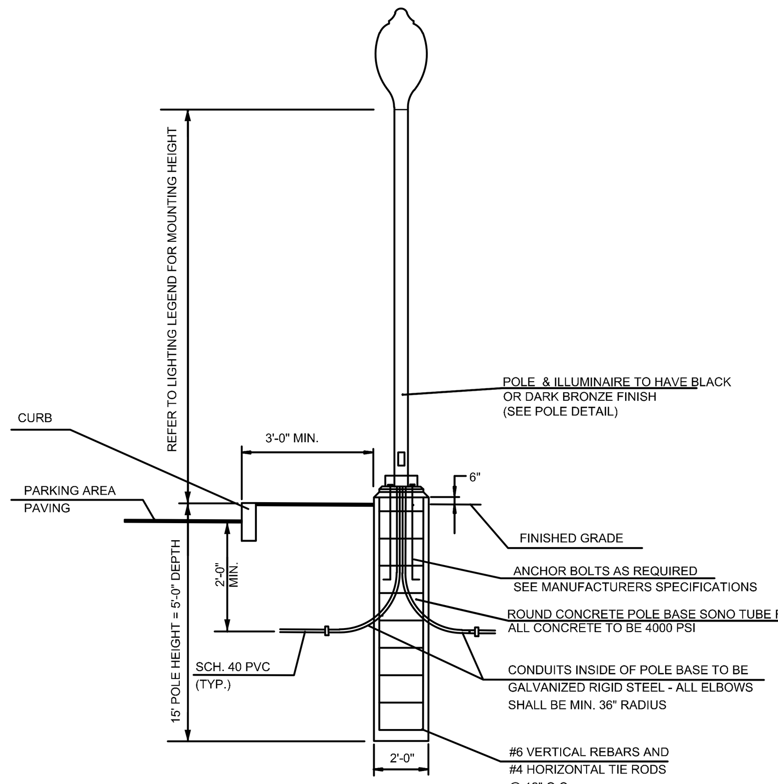

NOTE: POLE BASE AND CONDUIT SHALL BE SIZED PER MANUFACTURER'S SPECIFICATIONS.

POLE BASE
NOT TO SCALE

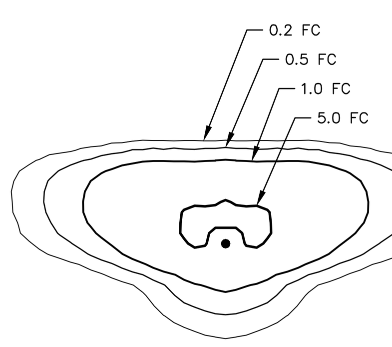

ISO FOOTCANDLE DIAGRAM
NOT TO SCALE

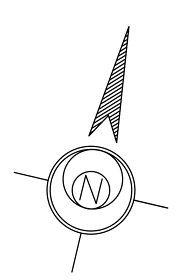

GRAPHIC SCALE 20 0 10 20 40 80 FEET
1 inch = 20 ft.

ESE.CTB
N:\PROJECTS\NEW JERSEY\20024-PIRHL-VERONA\ENGDEPT\DRAWINGS\20024-07-LIGHT.DWG-TGORMLEY-10/28/2021 10:42 AM

DATE: 10/28/21
JAY S. KRUSE
PROFESSIONAL ENGINEER
NEW JERSEY LICENSE
NO. GE041356

ESE CONSULTANTS
ENGINEERING • PLANNING • SURVEYING • ENVIRONMENTAL
ESE Consultants, Inc.
100 Willow Brook Road • Suite 200 • Freehold, NJ 07728
T: 732-446-8446
New Jersey Certificate of Authorization No. 24GA27999900

REV.	DATE	DESCRIPTION	DRAWN

New Jersey One Call
1 Corporate Place South
Suite 150
Piscataway, NJ 08854
1-800-272-1000
or 8-1-1
www.nj1-call.org
811 Know what's below. Call before you dig.

LIGHTING PLAN

FINAL MAJOR SITE PLAN
APARTMENTS AT VERONA
BLOCK 2301, LOTS 11, 12, 14-17, PORTION OF 18, AND 19, TAX MAP #23.01
TOWNSHIP OF VERONA, ESSEX COUNTY, NEW JERSEY

DATE: OCT. 28, 2021	SCALE: 1"=20'
DESIGN: JSK	DRAWN: TJG
JOB NO.: 20024	FILE NAME: 20024-07-LIGHT
REF. NO.: SD07.01	
SHEET NO.: 7 OF 13	

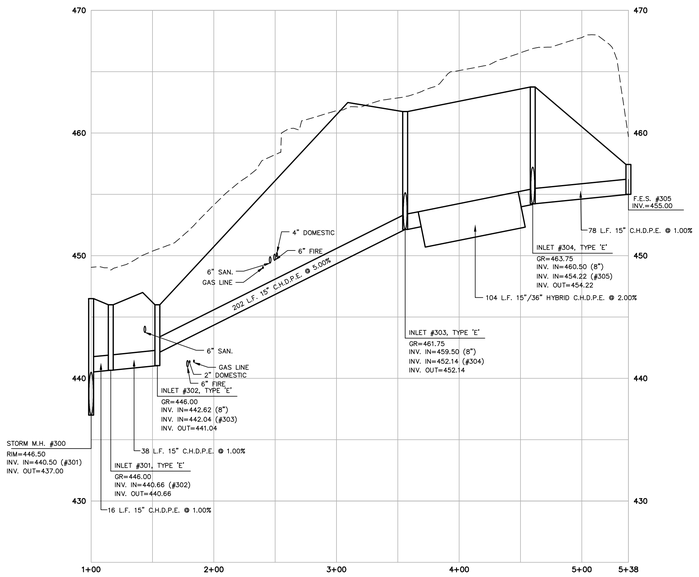

INL #300 TO F.E.S.#305

1"=50' Horizontal
1"=5' Vertical

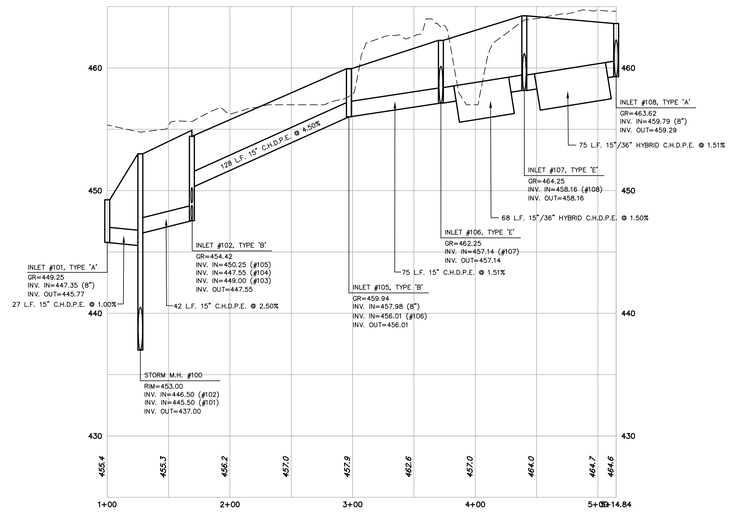

INL #101 TO INL #108

1"=50' Horizontal
1"=5' Vertical

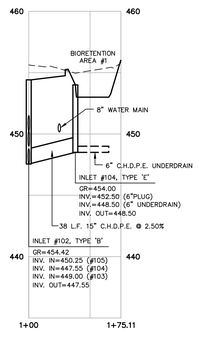

INL #102 TO INL #104

1"=50' Horizontal
1"=5' Vertical

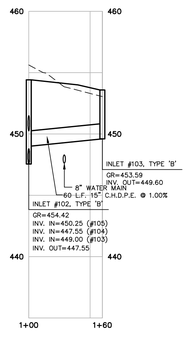

INL #102 TO INL #103

1"=50' Horizontal
1"=5' Vertical

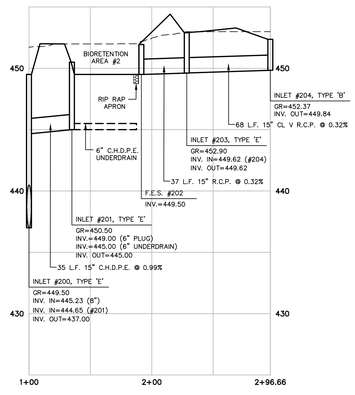

INL #200 TO INL #204

1"=50' Horizontal
1"=5' Vertical

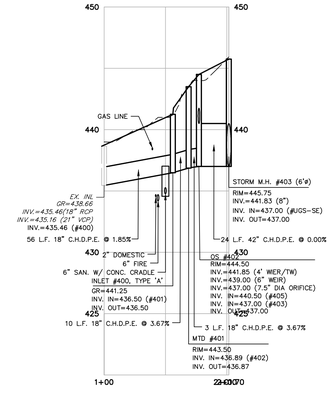

EXIST. INL TO INL #404

1"=50' Horizontal
1"=5' Vertical

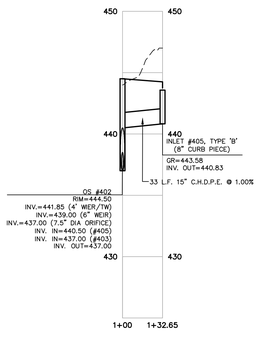

OS #402 TO INL #405

1"=50' Horizontal
1"=5' Vertical

GRAPHIC SCALE

50 0 50 100

(IN FEET)
1" = 50 FEET

VERTICAL GRAPHIC SCALE

5 0 5 10

(IN FEET)
1" = 5 FEET

DATE: 10/28/21
JAY S. KRUSE
PROFESSIONAL ENGINEER
N.J.P.E. LICENSE
NO. GE041356

ESE CONSULTANTS
ENGINEERING • PLANNING • SURVEYING • ENVIRONMENTAL
ESE Consultants, Inc.
100 Willow Brook Road • Suite 200 • Freehold, NJ 07728
T: 732-446-8446
New Jersey Certificate of Authorization No. 24GA27999900

REV.	DATE	DESCRIPTION	DRAWN

New Jersey One Call
1 Corporate Place South
PO Box 93
Piscataway, NJ 08854
1-800-272-1000
or 8-1-1
www.njt-call.org

Know what's below.
Call before you dig.

PROFILES

FINAL MAJOR SITE PLAN
APARTMENTS AT VERONA
BLOCK 2301, LOTS 11, 12, 14-17, PORTION OF 18, AND 19, TAX MAP #23.01
TOWNSHIP OF VERONA, ESSEX COUNTY, NEW JERSEY

DATE: OCT. 28, 2021	SCALE: AS SNOWN
DESIGN: JSK	DRAWN: TJG
JOB NO.: 20024	FILE NAME: 20024-08-PROF
REF. NO.: SD08.01	
SHEET NO.: 8 OF 13	

ESE CTB
N:\PROJECTS\NEW JERSEY\20024-PRHL-VERONA\ENGDEPT\DRAWINGS\20024-08-PROF.DWG-GGOELZ-10/25/2021 4:20 PM

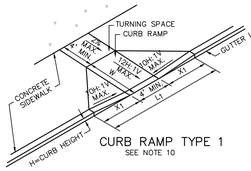

CURB RAMP TYPE 1
SEE NOTE 10

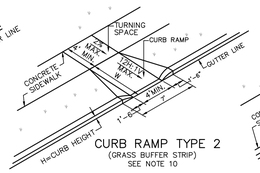

CURB RAMP TYPE 2
(GRASS BUFFER STRIP)
SEE NOTE 10

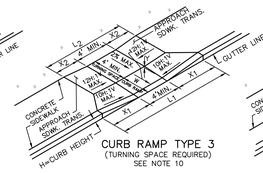

CURB RAMP TYPE 3
(TURNING SPACE REQUIRED)
SEE NOTE 10

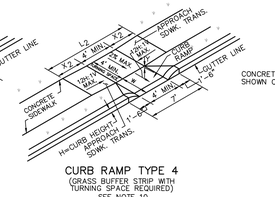

CURB RAMP TYPE 4
(GRASS BUFFER STRIP WITH TURNING SPACE REQUIRED)
SEE NOTE 10

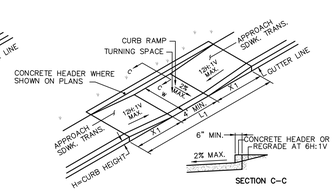

CURB RAMP TYPE 7
(LIMITED ROW)
(SEE NOTE 7 & NOTE 10)

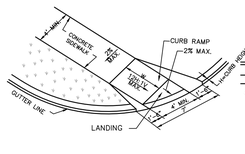

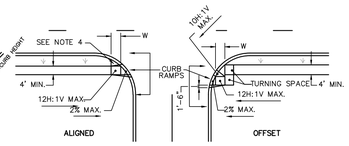

CURB RAMP TYPE 5

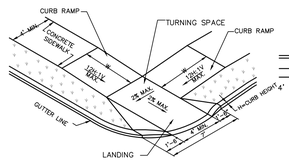

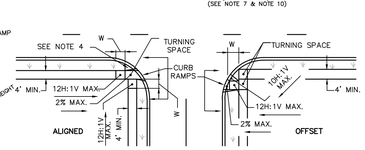

CURB RAMP TYPE 6

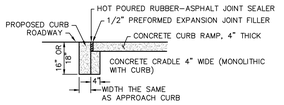

DROPPED CURB AND CRADLE

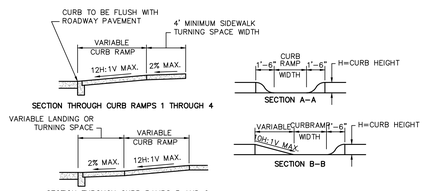

HANDICAP RAMPS
N.T.S.

HANDICAP RAMP GENERAL NOTES

1. KEEP TURNING SPACE, APPROACH SIDEWALK TRANSITIONS, AND CURB RAMP CLEAR OF OBSTRUCTIONS THAT PROTRUDE ABOVE THE SURFACE.
2. CURB (DROP CURB) GUTTER LINE TO BE FLUSH WITH ROADWAY PAVEMENT THE ENTIRE WIDTH OF THE RAMP (4 FEET MIN.) AT ALL CURB RAMPS.
3. FOR CURB RAMP TYPES 5 AND 6, IF A GRASS BUFFER DOES NOT EXIST, SLOPE CURB TO EQUAL SLOPE OF ADJACENT CURB RAMP.
4. SIDEWALK AND CURB RAMP WITHIN AREA ENCLOSED BY HEAVY LINES INDICATE THE PAY LIMIT FOR CONCRETE SIDEWALK OF THE APPROPRIATE ADJACENT THICKNESS.
5. CURB AND HEADER WITHIN AREA ENCLOSED BY HEAVY LINES INDICATE THE PAY LIMIT FOR VERTICAL CURB OR SLOPING CURB OF THE APPROPRIATE ADJACENT SIZE AND KIND.
6. WHERE THE DISTANCE FROM THE GUTTER LINE TO THE OUTSIDE EDGE OF SIDEWALK IS 6 FEET OR LESS, USE CURB RAMP TYPE 7, INSTEAD OF CURB RAMP TYPE 1 THROUGH 4.
7. CROSSWALKS AND STOP LINES MAY BE MARKED OR UNMARKED. SEE PLANS.
8. THE 12H:1V MAX SLOPE IS THE RUNNING SLOPE FOR CURB RAMPS, BUT ONLY THE 12H:1V SLOPE MEASURED AS X_2 IS THE RUNNING SLOPE FOR TYPE 3 AND TYPE 4 CURB RAMPS. ENSURE THE RUNNING SLOPE OF CURB RAMPS DOES NOT REQUIRE ITS LENGTH TO EXCEED 15 FEET. THE RUNNING SLOPE MAY EXCEED 12H:1V MAX SLOPE SO AS NOT TO EXCEED THE 15 FEET MAXIMUM LENGTH.
9. CURB RAMP TYPE 1 THROUGH 7 ARE NORMALLY PLACED ON THE RADIUS RETURN AT THE INTERSECTION AND ON THE TANGENT SECTION AS DRAWN.
10. DIMENSIONS SHOWN IN TABLES ARE FOR 4 INCH TO 8 INCH CURB HEIGHTS. WHERE THE CURB HEIGHTS ARE OTHER THAN WHAT IS PROVIDED IN THE TABLES, THE DIMENSIONS OF THE RAMPS WILL HAVE TO BE CALCULATED BASED ON CROSS SLOPES SHOWN.

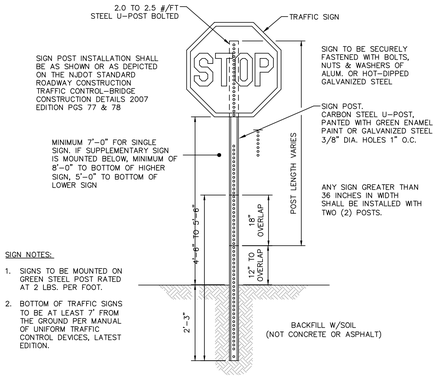

SIGN NOTES:

1. SIGNS TO BE MOUNTED ON GREEN STEEL POST RATED AT 2 LBS. PER FOOT.
2. BOTTOM OF TRAFFIC SIGNS TO BE AT LEAST 7' FROM THE GROUND PER MANUAL OF UNIFORM TRAFFIC CONTROL DEVICES, LATEST EDITION.

BREAKAWAY SIGN POST DETAIL
N.T.S.

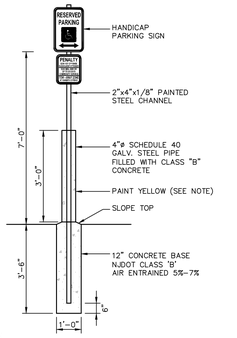

NOTE
PAINT SHALL BE:
• PRIMER NJDOT SPEC. No. 912.15
• YELLOW PAINT NJDOT SPEC. No. 912.31

HANDICAP MOUNTING SIGN W/ BOLLARD
N.T.S.

R1–1
30"x30"

STOP SIGN (#1)
N.T.S.

R7–8
12"x18"

R7–8P
18"x9"

PENALTY PLATE
10"x12"

HANDICAPPED PARKING SIGN (#2)
N.T.S.

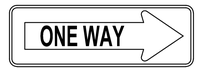

R6–1R
36"x12"

ONE WAY SIGN (#3)
N.T.S.

R3–2
24"x24"

NO LEFT TURN SIGN (#4)
N.T.S.

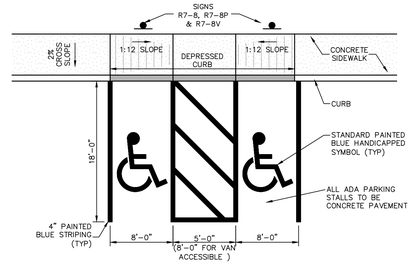

NOTE: WHERE TWO HANDICAP ACCESSIBLE SPACES ARE SIDE BY SIDE, THE ONE TO THE LEFT IS TO BE A VAN ACCESSIBLE SPACE.

HANDICAPPED PARKING (AT CURB) STRIPING DETAIL
N.T.S.

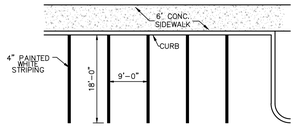

STANDARD PARKING STRIPING DETAIL
NOT TO SCALE

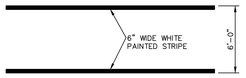

NOTE: ALL STRIPING SHALL BE THERMOPLASTIC PAINT

6' WIDE PEDESTRIAN CROSSWALK (FOR MINOR CROSSINGS) DETAIL
N.T.S.

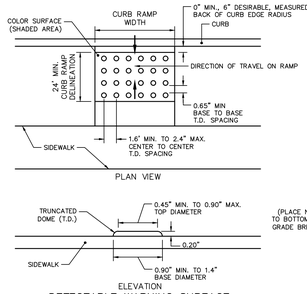

DETECTABLE WARNING SURFACE

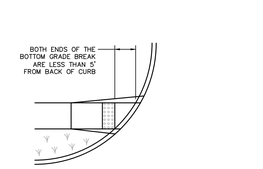

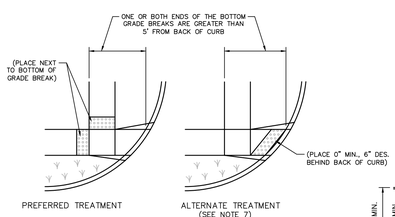

PLACEMENT OF DETECTABLE WARNING SURFACE FOR CURB RAMP TYPE 5 AND 6

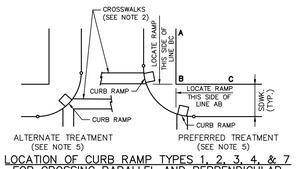

LOCATION OF CURB RAMP TYPES 1, 2, 3, 4, & 7 FOR CROSSING PARALLEL AND PERPENDICULAR TO HIGHWAY

DETECTABLE WARNING SURFACE NOTES:

1. KEEP TURNING SPACE, APPROACH SIDEWALK TRANSITIONS, AND CURB RAMP CLEAR OF OBSTRUCTIONS THAT PROTRUDE ABOVE THE SURFACE.
2. CROSSWALKS AND STOP LINES MAY BE MARKED OR UNMARKED. SEE PLANS.
3. FOR NARROW ISLAND WIDTH, SEE PEDESTRIAN REFUGE ISLAND WALKWAY OPENING AT INTERSECTIONS DETAIL.
4. FOR MEDIUM AND LARGE ISLAND WIDTH, SEE CURB RAMP TYPE 1 ON CD–606–1.
5. CONSTRUCT CURB RAMP TYPES 1, 2, 3, 4 & 7 PERPENDICULAR TO CURB LINE, AS SHOWN.
6. IF A CURB RAMP IS REQUIRED, THE LOCATION OF THE DETECTABLE WARNING SURFACE MUST BE AT THE BOTTOM OF THE RAMP AND WITHIN THE REQUIRED DISTANCE FROM THE RAIL.
7. A STANDARD DETECTABLE WARNING (DWS) SURFACE IS NOT AVAILABLE TO FIT THIS APPLICATION, AND THEREFORE ONE WILL NEED TO BE CUSTOMIZED. THE DWS SHOULD COVER THE ENTIRE WIDTH OF THE RAMP. THE ROWS OF DOMES ON THE DWS SHOULD FOLLOW THE DIRECTION OF TRAVEL OF THE RAMP, SO PEDESTRIANS WHO USE MOBILE DEVICES CAN TRACK BETWEEN THE DOMES.

DETECTABLE WARNING SURFACE
N.T.S.

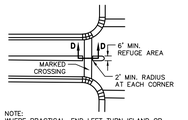

NOTE:
WHERE PRACTICAL, END LEFT TURN ISLAND OR DIVISIONAL ISLAND BEFORE CROSSWALK TO ELIMINATE CUT–THROUGH.

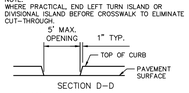

NOTE:
5'MIN. WIDE OPENING TO BE FLUSH WITH ROADWAY PAVEMENT.

PEDESTRIAN REFUGE ISLAND WALKWAY OPENING AT INTERSECTIONS

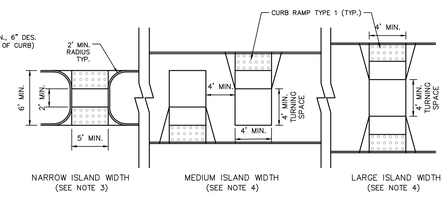

PEDESTRIAN REFUGE ISLAND

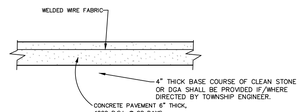

CONCRETE PAVEMENT DETAIL
N.T.S.

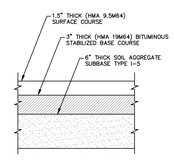

PARKING LOT PAVEMENT SECTION
N.T.S.

SIDEWALK WIDTH	CONSTRUCTION JOINT	EXPANSION JOINT
4'	4'	16'
5'	5'	20'
6'	6'	30'

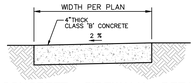

CONCRETE SIDEWALK DETAIL
NOT TO SCALE

NOTES:
1. 1/2" PREFORMED BITUMINOUS EXPANSION JOINT FILLER CONFORMING TO NJDOT STANDARDS TO BE INSTALLED AT INTERVALS LISTED IN TABLE FOR FULL WIDTH AND THICKNESS OF SIDEWALK.
2. CONSTRUCTION JOINTS SHALL BE INSTALLED AT INTERVALS LISTED IN TABLE.
3. SIDEWALK SHALL HAVE A FINE BROOM FINISH.

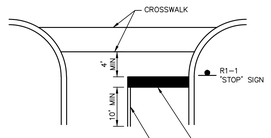

NOTE: ALL STOP BARS, STRIPING, ARROWS & TEXT SHALL BE THERMOPLASTIC PAINT.

STOP BAR DETAIL
N.T.S.

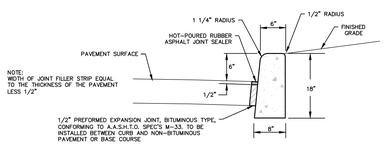

NOTE:
WIDTH OF JOINT FILLER STRIP EQUAL TO THE THICKNESS OF THE PAVEMENT LESS 1/2"

NOTES:
1. CONCRETE TO BE N.J.D.O.T. CLASS "B" 4,500 PSI (AIR ENTRAINED).
2. TRANSVERSE JOINTS 1/2" WIDE SHALL BE INSTALLED IN THE CURB 20'–0" APART AND SHALL BE FILLED WITH PREFORMED, BITUMINOUS– IMPREGNATED FIBER JOINT FILLER, COMPLYING WITH THE REQUIREMENTS OF A.A.S.H.T.O. M–213, RECESSED 1/4" IN FROM THE FRONT FACE AND TOP OF THE CURB.
3. DUMMY JOINTS (FORMED) SHALL BE INSTALLED MIDWAY BETWEEN EXPANSION JOINTS.

CONCRETE VERTICAL CURB DETAIL
N.T.S.

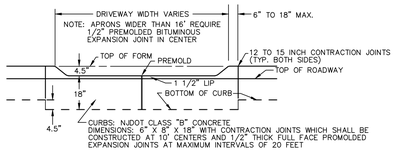

DEPRESSED CURB DETAIL
N.T.S.

DATE: 10/28/21
JAY S. KRUSE
PROFESSIONAL ENGINEER
NEW JERSEY LICENSE
NO. GE041356

ESE CONSULTANTS
ENGINEERING • PLANNING • SURVEYING • ENVIRONMENTAL
ESE Consultants, Inc.
100 Willow Brook Road • Suite 200 • Freehold, NJ 07728
T: 732-446-8446
New Jersey Certificate of Authorization No. 24GA27999900

REV.	DATE	DESCRIPTION	DRAWN

New Jersey One Call
1 Corporate Place South
PO Box 476
Piscataway, NJ 08854
1-800-272-1000
or 8-1-1
www.nj-1-call.org
811
Know what's below.
Call before you dig.

CONSTRUCTION DETAILS

FINAL MAJOR SITE PLAN
APARTMENTS AT VERONA
BLOCK 2301, LOTS 11, 12, 14–17, PORTION OF 18, AND 19, TAX MAP #23.01
TOWNSHIP OF VERONA, ESSEX COUNTY, NEW JERSEY

DATE: OCT. 28, 2021	SCALE: AS SHOWN
DESIGN:	DRAWN:
JOB NO.: 20024	FILE NAME: 20024–09–DET
REF. NO.: SD09.01	
SHEET NO.: 9 OF 13	

ESE CTB
N:\PROJECTS\NEW JERSEY\20024-PRHL-VERONA\ENGDEPT\DRAWINGS\20024-09-DETDWG-TORNELEY-10/28/2021 12:04 PM

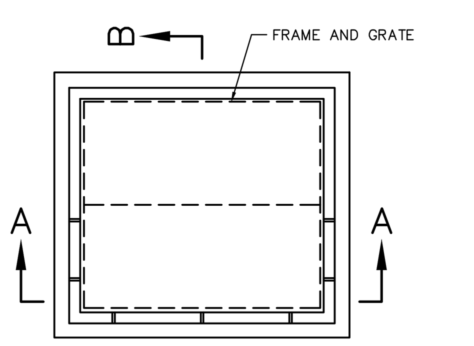

INLET NOTES:

1. INVERTS TO BE ELIMINATED IN BOTTOM OF TERMINAL INLETS. BOTTOMS SHALL BE DISHED AND SLOPED TOWARDS THE OUTLET PIPE AT A RATE OF GRADE OF 2 INCHES PER FOOT.
2. THIS INLET MAY BE CONSTRUCTED OF CONCRETE OR CONCRETE BLOCK. IF CONCRETE BLOCK IS USED THE BOTTOM SHALL BE AS SHOWN FOR CONCRETE AND THE OUTSIDE OF THE WALLS SHALL BE PLASTERED WITH 1/2" COAT OF 1:2 CEMENT SAND MORTAR.
3. THE CONTRACTOR SHALL BE RESPONSIBLE FOR CONSTRUCTING ADEQUATE BALLAST TO OFFSET FLOTATION FORCES ACTING ON STRUCTURE.
4. ALL REINFORCEMENT IS SUBJECT TO ENGINEERS APPROVAL BEFORE CONSTRUCTION.
5. ALL PRECAST INLETS SHALL CONFORM TO A.S.T.M. SPEC. C-478, MINIMUM COMPRESSIVE STRENGTH 4,000 P.S.I. AT 28 DAYS. PRECAST SECTIONS SHALL HAVE FLEXIBLE WATER TIGHT RUBBER GASKET IN ACCORDANCE WITH A.S.T.M. DESIGNATION C-361 AND C-443.

'B' TYPE INLET-CAMPBELL FOUNDRY PATTERN No. 2618
'E' TYPE INLET-CAMPBELL FOUNDRY PATTERN No. 3425
OR APPROVED EQUALS

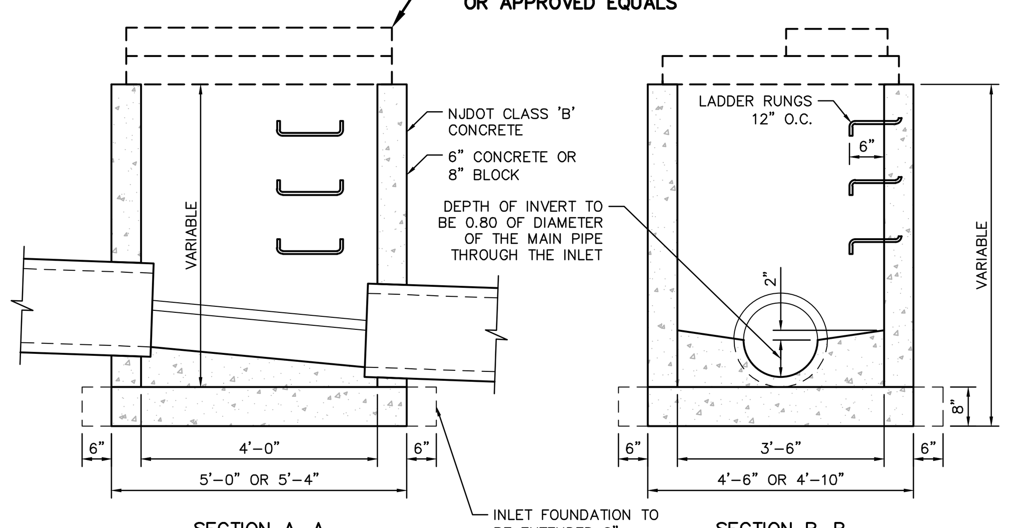

INLET DETAIL TYPE 'B' AND 'E'

NOT TO SCALE

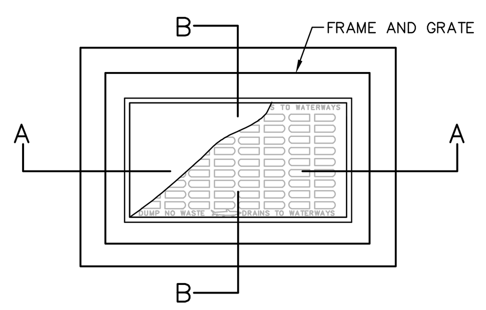

NOTES:

1. INVERTS TO BE ELIMINATED IN BOTTOM OF TERMINAL INLETS. BOTTOMS SHALL BE DISHED AND SLOPED TOWARDS THE OUTLET PIPE AT A RATE OF GRADE OF 2 INCHES PER FOOT.
2. THIS INLET MAY BE CONSTRUCTED OF CONCRETE OR CONCRETE BLOCK. IF CONCRETE BLOCK IS USED THE BOTTOM SHALL BE AS SHOWN FOR CONCRETE AND THE OUTSIDE OF THE WALLS SHALL BE PLASTERED WITH 1/2" COAT OF 1:2 CEMENT SAND MORTAR.
3. CASTINGS TO BE CAMPABELL FOUNDRY PATTERN NO. 3405 OR APPROVED EQUAL.
4. THE CONTRACTOR SHALL BE RESPONSIBLE FOR CONSTRUCTING ADEQUATE BALLAST TO OFFSET FLOTATION FORCES ACTING ON STRUCTURE.
5. ALL REINFORCEMENT IS SUBJECT TO ENGINEERS APPROVAL BEFORE CONSTRUCTION.
6. ALL PRECAST INLETS SHALL CONFORM TO A.S.T.M. SPEC. C-478, MINIMUM COMPRESSIVE STRENGTH 4,000 P.S.I. AT 28 DAYS. PRECAST SECTIONS SHALL HAVE FLEXIBLE WATER TIGHT RUBBER GASKET IN ACCORDANCE WITH A.S.T.M. DESIGNATION C-361 AND C-443.

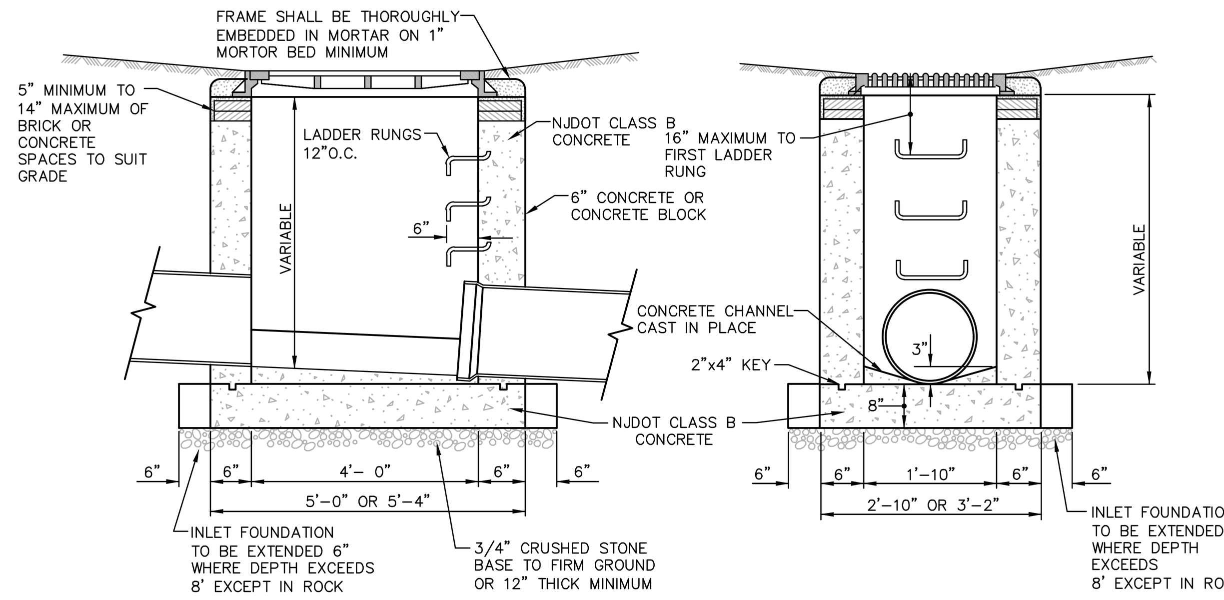

INLET TYPE "A"

N.T.S.

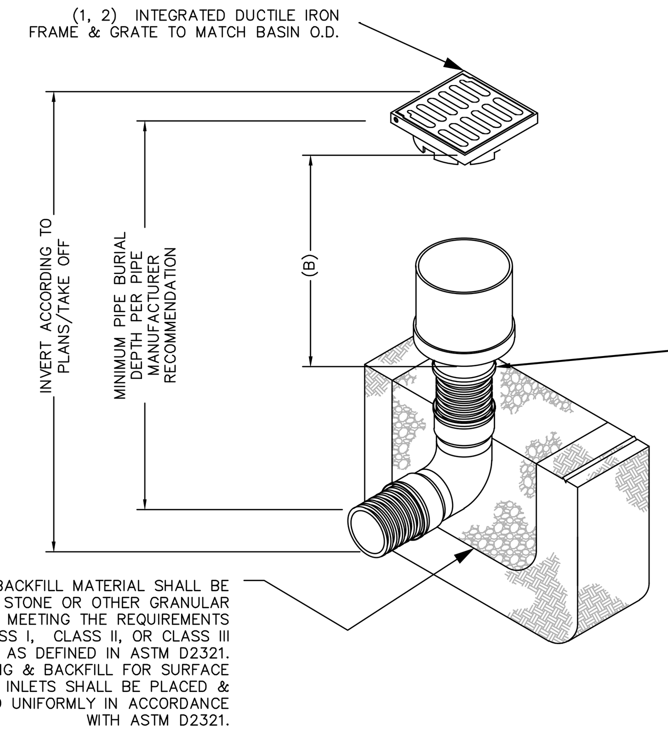

ADAPTER SIZE	B
4"	10.50
6"	11.50
8"	11.50
10"	11.25
12"	6.00

(3) VARIOUS TYPES OF INLET & OUTLET ADAPTERS AVAILABLE: 4" – 12" FOR CORRUGATED HDPE (ADS N-12/HANCOR DUAL WALL,ADS/HANCOR SINGLE WALL), N-12 HP, PVC SEWER (EX: SDR 35), PVC DWV (EX: SCH 40), PVC C900/C905, CORRUGATED & RIBBED PVC (CORRUGATED HDPE SHOWN)

GRATE OPTIONS	LOAD RATING	PART #	DRAWING #
PEDESTRIAN	MEETS H-10	1299CGP	7001-110-202
STANDARD	MEETS H-20	1299CGS	7001-110-203
SOLID COVER	MEETS H-20	1299CGC	7001-110-204
PEDESTRIAN BRONZE	N/A	1299CGPB	7001-110-205
DOME	N/A	1299CGD	7001-110-206
DROP IN GRATE	LIGHT DUTY	1201DI	7001-110-021

1 – GRATES/SOLID COVER SHALL BE DUCTILE IRON PER ASTM A536 GRADE 70-50-05, WITH THE EXCEPTION OF THE BRONZE GRATE.
2 – FRAMES SHALL BE DUCTILE IRON PER ASTM A536 GRADE 70-50-05.
3 – DRAINAGE CONNECTION STUB JOINT TIGHTNESS SHALL CONFORM TO ASTM D3212 FOR CORRUGATED HDPE (ADS N-12/HANCOR DUAL WALL), N-12 HP, & PVC SEWER.
4 – DIMENSIONS ARE FOR REFERENCE ONLY. ACTUAL DIMENSIONS MAY VARY.
5 – DIMENSIONS ARE IN INCHES
6 – SEE DRAWING NO. 7001-110-275 FOR ADS N-12 & HANCOR DUAL WALL BELL INFORMATION & DRAWING NO. 7001-110-364 FOR N-12 HP BELL INFORMATION.

12" YARD INLET

N.T.S.

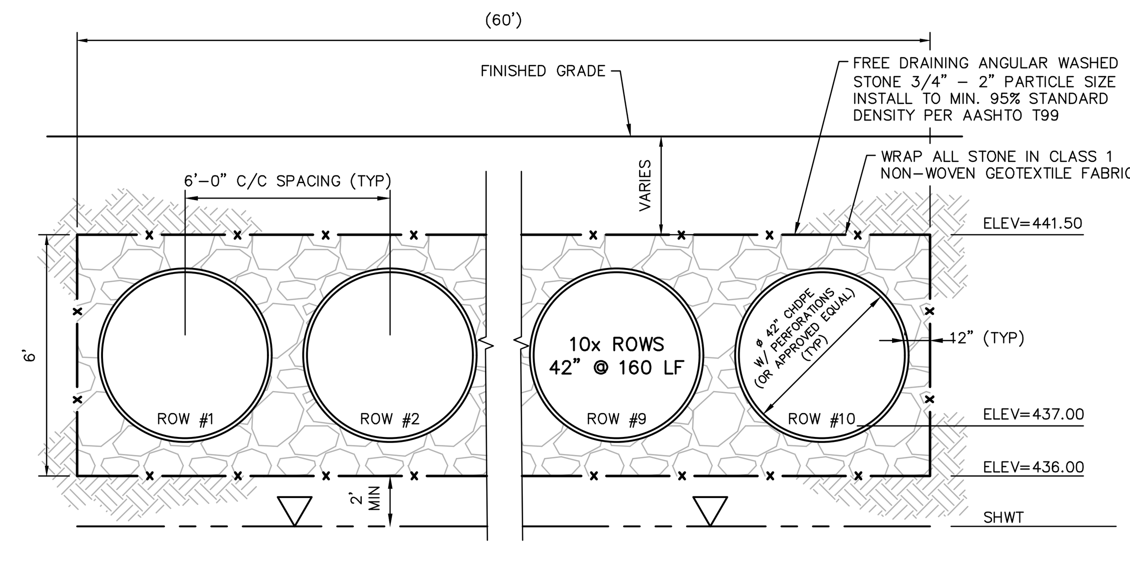

UNDERGROUND STORAGE SYSTEM

N.T.S.

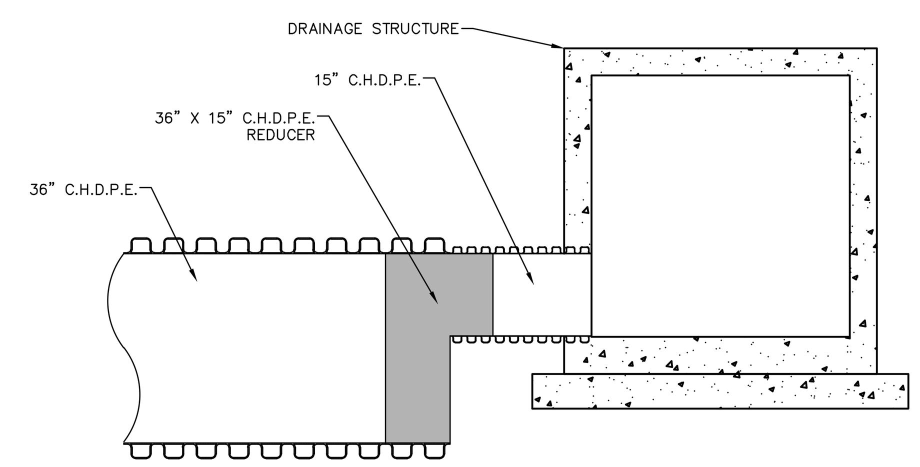

15"/36" HYBRID C.H.D.P.E. DETAIL

N.T.S.

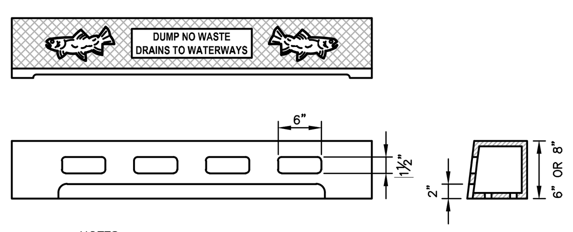

NOTES:

1. CURBS ARE DESIGNED TO FIT AND RETROFIT NJDOT STANDARD TYPE 'B' AND TYPE 'D' CATCH BASINS.
2. NAMEPLATE MESSAGE CAN BE MODIFIED TO SHOW A MORE SPECIFIC LOCATION SUCH AS: WATERWAYS, RIVER, NAY, STREAM, LAKE, ETC.

TYPE 'N' ECO – PHASE II

N.T.S.

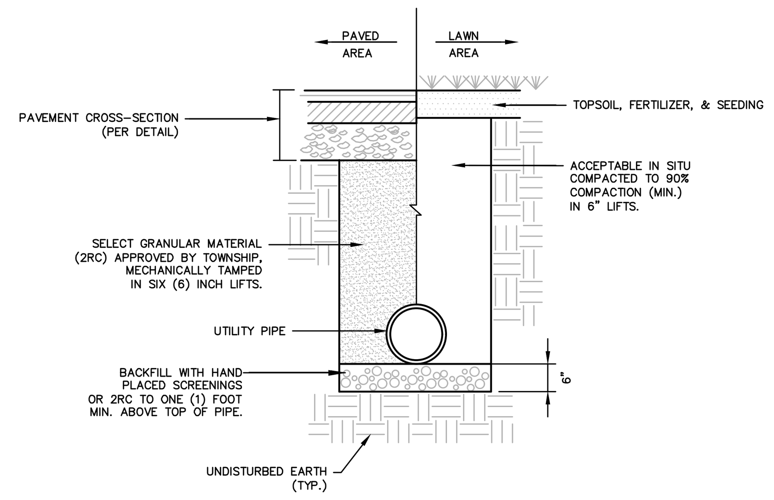

NOTES:

1. SUITABLE BACKFILL MATERIAL, WHEN USED AS BACKFILL SHALL BE CAPABLE OF BEING COMPACTED TO AT LEAST NINETY-FIVE PERCENT (95%) OF MAXIMUM DENSITY AT OPTIMUM MOISTURE CONTENT.
2. TYPE 1 MATERIAL: EXCAVATED MATERIAL FROM THE TRENCH OR MATERIALS FROM OTHER SOURCES WHICH ARE FREE FROM LARGE CLODS, ROOTS, OR STONES LARGER THAT TWO INCHES MAY BE USED.
3. TYPE 2 MATERIAL: EXCAVATED MATERIAL FROM THE TRENCH OR MATERIALS FROM OTHER SOURCES WHICH ARE FREE FROM LARGE CLODS, ROOTS, OR STONES LARGER THAN EIGHT INCHES MAY BE USED.

STORM SEWER PIPE TRENCH DETAIL

N.T.S.

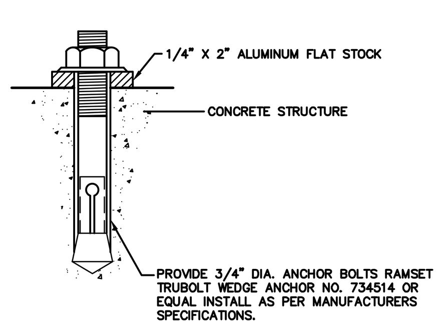

ANCHOR BOLT DETAIL

N.T.S.

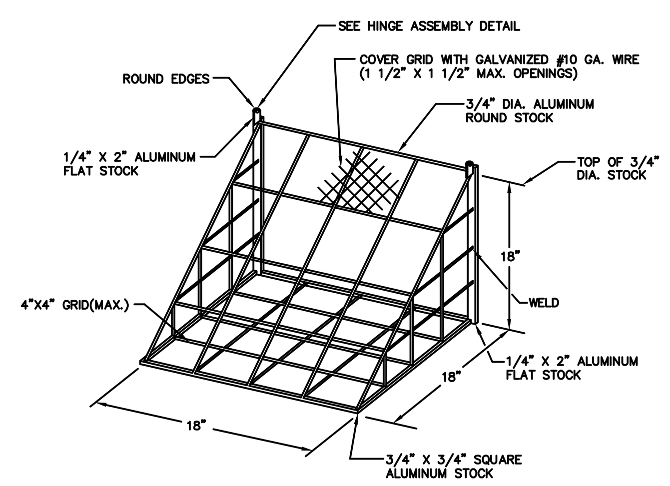

3" TO 18" PRIMARY ORIFICE TRASH RACK DETAIL

N.T.S.

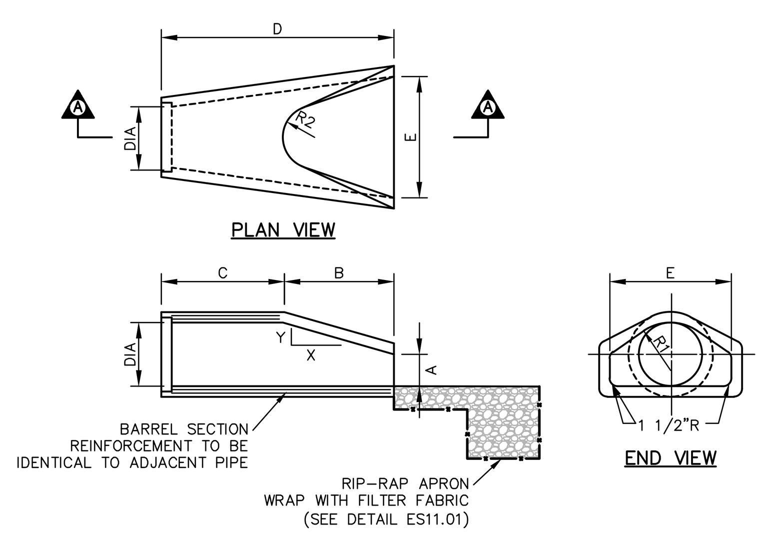

DIA	A	B	C	D	E	R1	R2	X:Y
15"	6"	2'-3"	3'-10"	6'-1"	2'-6"	12 1/2"	11"	3:1
18"	9"	2'-3"	3'-10"	6'-1"	3'-0"	15 1/2"	12"	3:1
21"	9"	2'-11"	3'-2"	6'-1"	3'-6"	16 1/8"	13"	3:1
24"	9 1/2"	3'-7.5"	2'-6"	6'-1.5"	4'-0"	16 13/16"	14"	3:1
27"	10 1/2"	4'-0"	2'-1.5"	6'-1.5"	4'-6"	18 3/16"	14 1/2"	3:1
30"	1'-0"	4'-6"	1'-7.75"	6'-1.75"	51-0"	18 1/2"	15"	3:1
36"	1'-3"	5'-3"	2'-10"	8'-1"	6'-0"	24 9/16"	20"	3:1
48"	2'-0"	6'-0"	2'-2"	8'-2"	7'-0"	28 1/2"	22"	3:1

THE ABOVE CHART IS FOR REFERENCE ONLY, DIMENSIONS MAY VARY WITH DIFFERENT MANUFACTURERS

FLARED END SECTION

N.T.S.

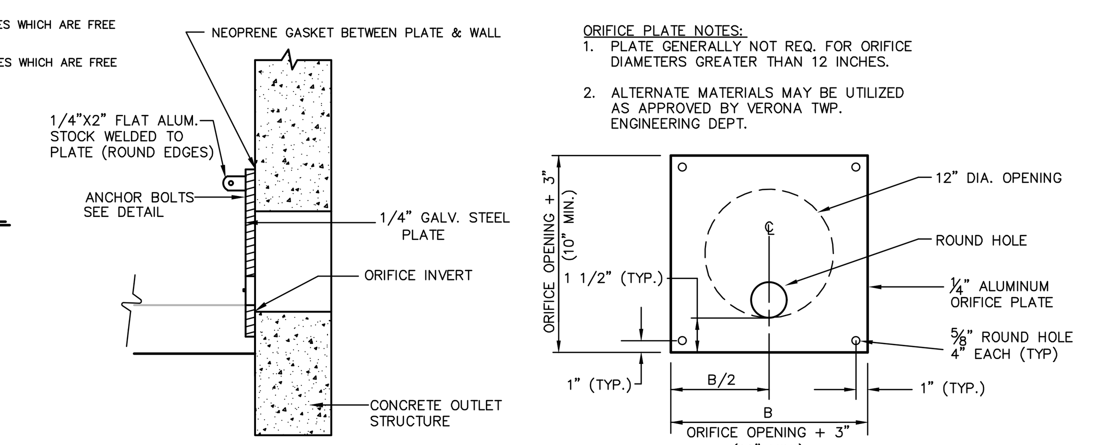

ORIFICE PLATE NOTES:

1. PLATE GENERALLY NOT REQ. FOR ORIFICE DIAMETERS GREATER THAN 12 INCHES.
2. ALTERNATE MATERIALS MAY BE UTILIZED AS APPROVED BY VERONA TWP. ENGINEERING DEPT.

ORIFICE PLATE DETAIL

N.T.S.

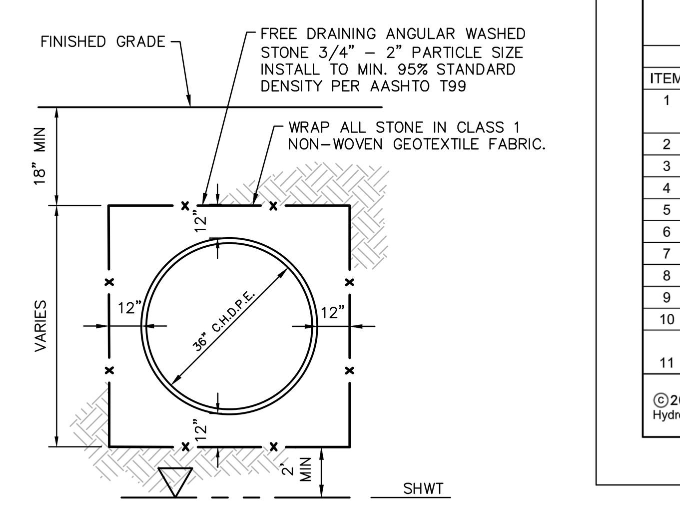

15"/36" HYBRID C.H.D.P.E. TRENCH DETAIL

N.T.S.

NOT FOR CONSTRUCTION - CONTACT HYDRO INTERNATIONAL FOR SITE SPECIFIC DRAWINGS

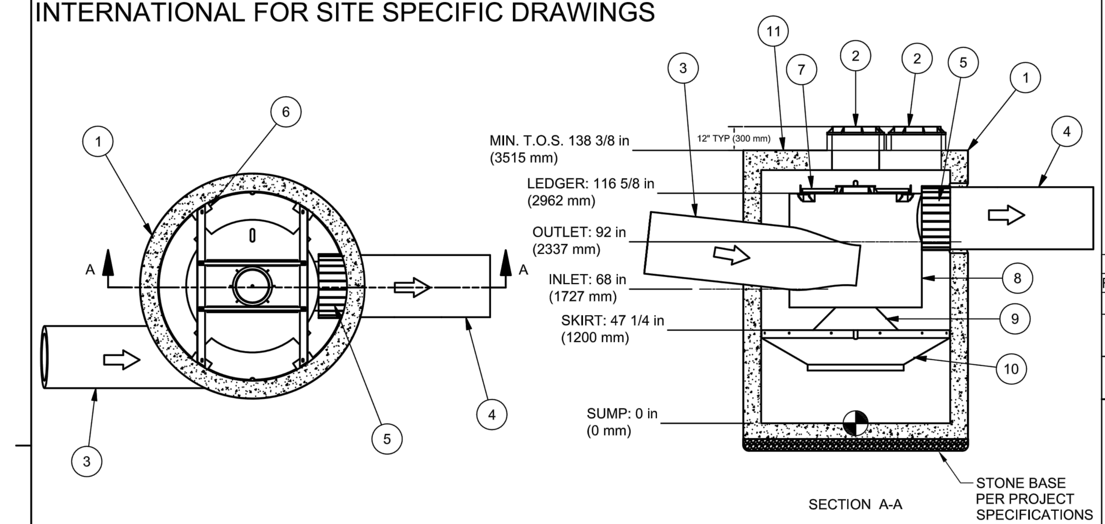

Notes

1. MANHOLE WALL AND SLAB THICKNESSES ARE NOT TO SCALE.
2. CONTACT HYDRO INTERNATIONAL FOR A BOTTOM OF STRUCTURE ELEVATION PRIOR TO SETTING DOWNSTREAM DEFENDER MANHOLE.
3. TYPICALLY DOWNSTREAM DEFENDERS WILL BE DELIVERED TO THE PROJECT SITE WITH A TOP SLAB ELEVATION 12"± BELOW FINISHED GRADE. PURCHASER SHALL BE RESPONSIBLE FOR GRADE RINGS OR BLOCK AND MORTAR NECESSARY TO MEET FINAL GRADE.

REVISION HISTORY

REV	BY	DATE	DESCRIPTION
B	JLL	1/7/13	Metric Dim.

Date 9/14/2011	Scale 3/16" = 1'-0"	
Drawn EMH	Checked KJM	Approved

Title

8-FT (2.44m) DIAMETER DOWNSTREAM DEFENDER

GENERAL ARRANGEMENT

Parts List

ITEM	DESCRIPTION	SIZE
1	PRECAST MANHOLE (BY HYDRO VIA PRECASTER)	96 in
2	FRAME AND COVER	24 in
3	INLET PIPE (BY OTHERS) [2]	24 in
4	OUTLET PIPE (BY OTHERS) [1]	24 in
5	PIPE COUPLING (BY OTHERS)	
6	LEDGER ANGLE	
7	SUPPORT FRAME	
8	DIP PLATE	
9	CENTER SHAFT AND CONE	
10	BENCHING SKIRT	
11	MATERIALS AND LABOR TO ACHIEVE FINAL GRADE (BY OTHERS)	

CAPACITIES:

1. Peak treatment flow: 15.0 cfs (425 l/s)
2. Sediment storage capacity: 4.65 Cu. yd. (3.56 cu. m.)
3. Oil storage capacity: 540 Gal. (2044 liters)

ADDITIONAL DESIGN INFORMATION:

1. The outlet pipe stub (not shown) is a roto-molded product with an I.D. of 24 in. that cannot be modified. To avoid the use of a reducer or expander on the outlet a 24 in. outlet pipe should be used if possible. The orientation of the outlet pipe can be adjusted to suit site conditions.
2. Maximum pipe size is 24 in. The inlet pipe invert should be placed one inlet pipe diameter below the outlet pipe invert. The I.D. of the inlet pipe should be placed tangent to the I.D. of the manhole. The orientation of the inlet pipe can be adjusted to suit site conditions. Headloss at 15.0 cfs with a 24 in. inlet: 13 in. (330 mm). Headloss will increase with smaller inlet pipes.
3. Sediment shall be stored in a zone that is isolated form the main flow path and protected from re-entrainment by the benching skirt.
4. Dimensions are general and intended for guidance only.

Hydro International

Stormwater Solutions
94 Hutchins Drive
Portland, Maine 04102
Tel: (207) 756-6200
Fax: (207) 756-6212
stormwaterinquiry@hydro-int.com

©2012 Hydro International

Any warranty made by Hydro International only applies to those items supplied by it. Hydro International does not accept and expressly disclaims any responsibility or liability for any structure, plant or equipment (or the performance thereof) designed, built, manufactured or supplied by any third-party. Hydro International has a policy of continuous product development and reserves the right to amend the specifications of any of its products or equipment at any time. Hydro International expressly disclaims any liability for the performance of its equipment (or any part thereof) used or made subject to conditions outside of the conditions set forth in Hydro International's design specifications. Hydro International owns the copyright in and to this drawing, which is supplied in confidence, and all intended recipients of the drawing, by their use thereof, agree to hold the drawing in confidence and not to use it for any purpose other than for which it was supplied and not reproduce, in whole or in part, the drawing or any of the equipment or structures depicted therein, without prior written permission of Hydro International.

CAD Ref: D8GA
Project No.
DrawingNo. D8GA Rev. B

STORM MTD #401

N.T.S.

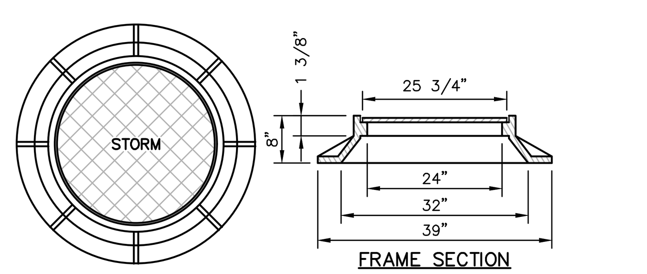

NOTE: MANHOLE FRAME & COVER AS MANUFACTURED BY CAMPBELL FOUNDRY TYPE 1203B OR APPROVED EQUAL.

TYP. MANHOLE FRAME & COVER

N.T.S.

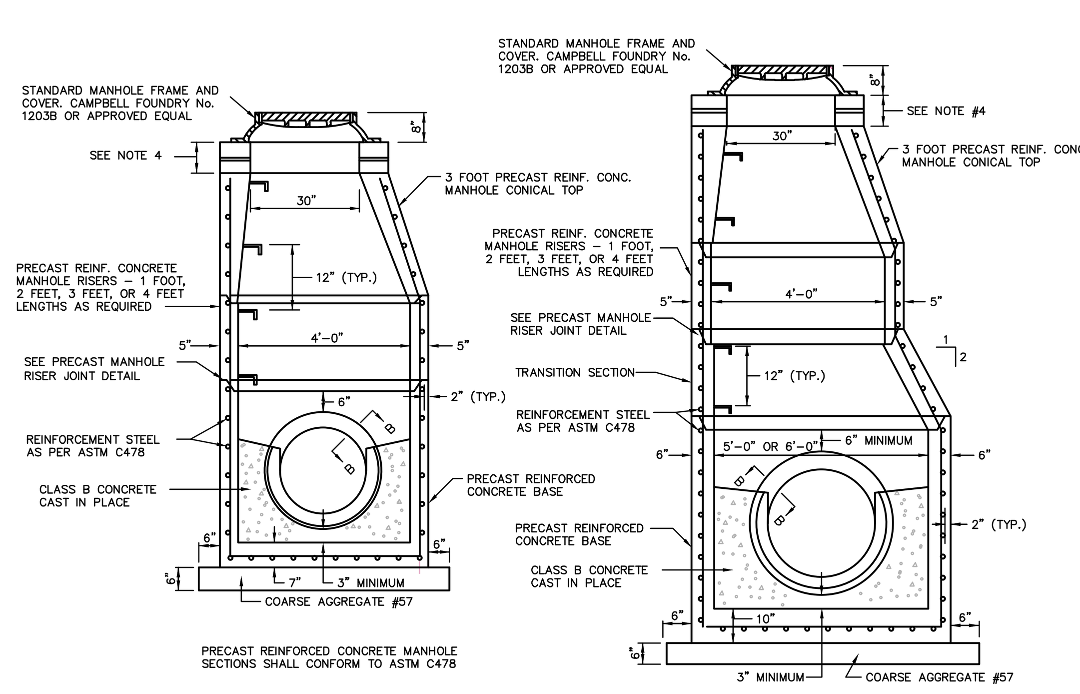

MANHOLES PRECAST CONCRETE

MANHOLES 5' DIAMETER, MANHOLES 6' DIAMETER PRECAST CONCRETE

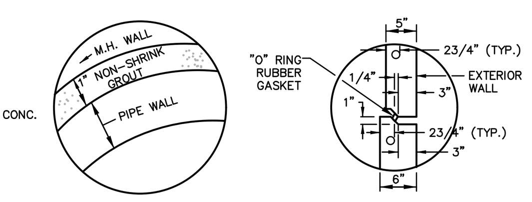

SECTION B-B **PRECAST MANHOLE RISER JOINT**

GENERAL MANHOLE NOTES:

1. MANHOLES MAY BE CONSTRUCTED OF BRICK, CONCRETE, CONCRETE BLOCK, OR PRECAST CONCRETE.
2. WHEN THE DEPTH OF A MANHOLE EXCEEDS 10 FEET AS MEASURED FROM TOP OF COVER TO INVERT, THE WALLS OF BRICK, CONCRETE, OR CONCRETE BLOCK BELOW A DEPTH OF 8 FEET SHALL BE 12 INCHES THICK. THE OVERALL HORIZONTAL DIMENSIONS SHALL BE INCREASED 12 INCHES AND THE DEPTH OF THE FOUNDATION INCREASED TO 12 INCHES. WHEN ROCK IS ENCOUNTERED THE HORIZONTAL DIMENSION AND DEPTH OF THE FOUNDATION SHALL NOT BE INCREASED. THE THICKNESS OF PRECAST CONCRETE MANHOLE WALLS DOES NOT HAVE TO BE INCREASED IF THE DEPTH OF THE MANHOLE EXCEEDS 10 FEET.
3. CASTINGS OF PRECAST MANHOLES SHALL BE ADJUSTED TO GRADE WITH COURSES OF BRICK OR CONCRETE BLOCK, AS REQUIRED, 12 INCHES MAXIMUM.
4. AS AN ALTERNATE TO THE STANDARD MANHOLE FRAME AND COVER, A 39 INCH DIAMETER FRAME WITH 4 INCH FLANGE MAY BE FURNISHED WITH ALL OTHER DIMENSIONS AND WEIGHTS REMAINING THE SAME.
5. IN A BRICK, CONCRETE, OR CONCRETE BLOCK MANHOLE, THE INVERT SHALL BE CONSTRUCTED IN TWO STAGES.
6. AS AN ALTERNATIVE, COPOLMYER POLYPROPYLENE PLASTIC LADDER RUNGS MY BE FURNISHED IN PRECAST MANHOLES AND INLETS.

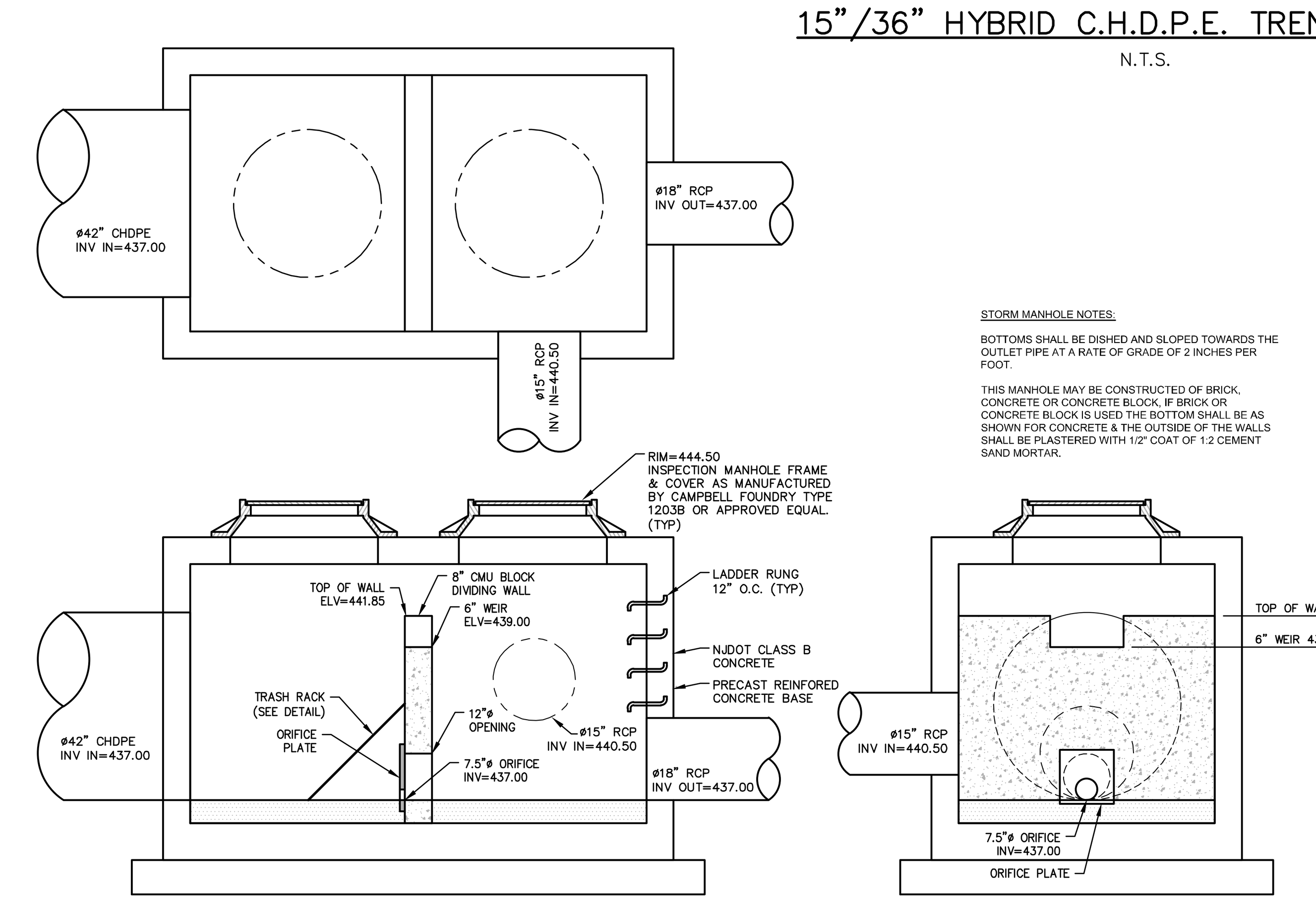

STORM MANHOLE NOTES:

BOTTOMS SHALL BE DISHED AND SLOPED TOWARDS THE OUTLET PIPE AT A RATE OF GRADE OF 2 INCHES PER FOOT.

THIS MANHOLE MAY BE CONSTRUCTED OF BRICK, CONCRETE OR CONCRETE BLOCK, IF BRICK OR CONCRETE BLOCK IS USED THE BOTTOM SHALL BE AS SHOWN FOR CONCRETE & THE OUTSIDE OF THE WALLS SHALL BE PLASTERED WITH 1/2" COAT OF 1:2 CEMENT SAND MORTAR.

OUTLET STRUCTURE 402 – DOUBLE 'B' INLET BOX

N.T.S.

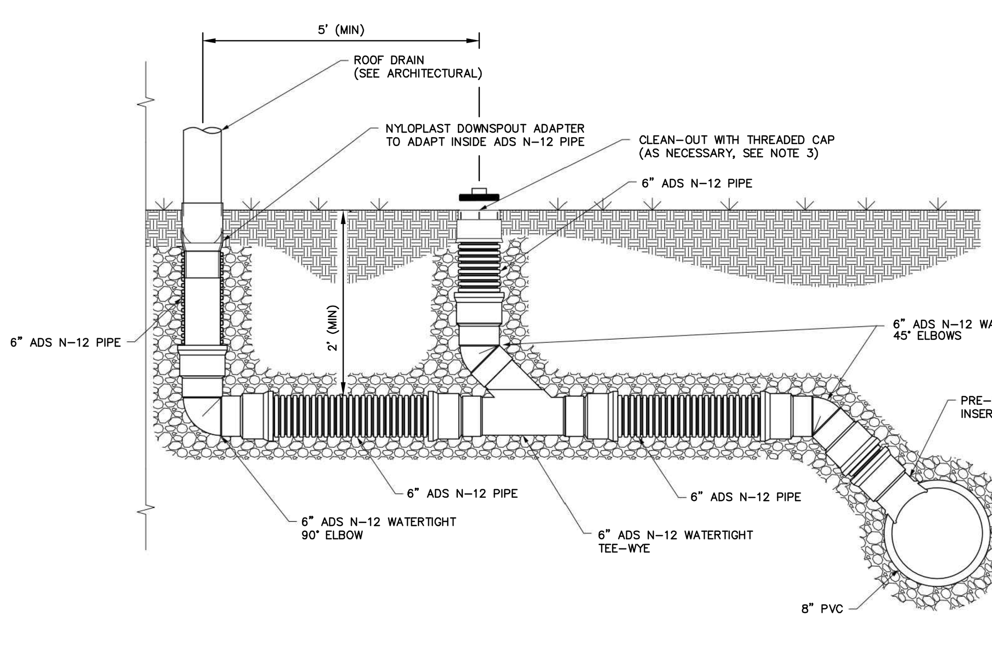

ROOF DOWNSPOUT CONNECTION NOTES

1. ALL PIPE TO BE SMOOTH INTERIOR WALL CORRUGATED HDPE, ADS N-12 OR APPROVED EQUAL
2. CONTRACTOR TO COORDINATE AND CONFIRM LOCATIONS OF ALL INTERNAL AND EXTERNAL DOWNSPOUT LOCATIONS WITH ARCHITECTURAL PLANS PRIOR TO INSTALLATION. CONNECTIONS TO BE PROVIDED FOR ALL INTERNAL AND EXTERNAL DOWNSPOUTS/DRAINS.
3. IN-LINE CLEAN OUT CAN BE OMITTED IF BUILDING MOUNTED DOWNSPOUT HAS CLEAN OUT SPECIFIED NEAR EXTERNAL GRADE.

ROOF DRAIN CONNECTION DETAIL

N.T.S.

DATE: 10/28/21
JAY S. KRUSE
PROFESSIONAL ENGINEER
NEW JERSEY LICENSE
NO. GE041356

ESE CONSULTANTS
ENGINEERING • PLANNING • SURVEYING • ENVIRONMENTAL
ESE Consultants, Inc.
100 Willow Brook Road • Suite 200 • Freehold, NJ 07728
T: 732-446-8446
New Jersey Certificate of Authorization No. 24GA27999900

REV.	DATE	DESCRIPTION	DRAWN

New Jersey One Call
1 Corporate Place South
Suite 150
Piscataway, NJ 08854
1-800-272-1000
or 8-1-1
www.nj1-call.org

811 Know what's below. Call before you dig.

CONSTRUCTION DETAILS

FINAL MAJOR SITE PLAN
APARTMENTS AT VERONA
BLOCK 2301, LOTS 11, 12, 14-17, PORTION OF 18, AND 19, TAX MAP #23.01
TOWNSHIP OF VERONA, ESSEX COUNTY, NEW JERSEY

DATE: OCT. 28, 2021	SCALE: AS SHOWN
DESIGN:	DRAWN:
JOB NO.: 20024	FILE NAME: 20024-09-DET
REF. NO.: SD09.02	
SHEET NO.: 10 OF 13	

ESE.CTB
N:\PROJECTS\NEW JERSEY\20024-PIRHL-VERONA\ENGDEPT\DRAWINGS\20024-09-DET.DWG-TGORMLEY-10/28/2021 12:04 PM

CONCRETE THRUST BLOCK
N.T.S.

THRUST BLOCK TABLE

DIAMETER (d) OF PIPE (INCHES)	UP TO 22-1/2° BEND	UP TO 45° BEND	UP TO 90° BEND	TEES AND PLUGS	DEAD END TEE AND 90° BEND
CONTACT BEARING AREA OF TRUST BLOCK WITH UNDISTURBED EARTH (SQUARE FEET)					
4	0.6	1.2	2.1	1.5	A: 1.5 B: 0.6
6	1.2	2.4	4.5	3.3	A: 3.3 B: 1.2
8	2.1	4.2	8.1	5.7	A: 5.7 B: 2.4
10	3.3	6.9	12.6	8.7	A: 8.7 B: 3.9
12	5.1	9.9	18.0	12.6	A: 12.6 B: 5.4
16	8.7	17.4	32.1	22.5	A: 22.5 B: 9.6
20	13.8	27.0	50.1	35.4	A: 35.4 B: 14.7
24	19.8	39.0	72.0	51.0	A: 51.0 B: 21.0

THRUST BLOCK CONSTRUCTION NOTES:

1. BEARING AREA FOR THRUST BLOCKS ARE BASED ON THE UNDISTURBED SOIL WITH BEARING CAPACITY OF 1000 LBS. PER SQUARE FOOT. FOR OTHER SOIL OF LESS BEARING CAPACITY, THE AREAS SHALL BE ADJUSTED ACCORDING;Y. (FIGURE 14 ASCE "PIPELINE DESIGN FOR WATER AND WASTEWATER, 1975")
2. ALL CONCRETE FOR THURST BLOCKS SHALL BE NJDOT, CLASS C.
3. DIMENSIONS OF THRUST BLOCKS SHALL BE APPROXIMATELY SQUARE, AND THE THRUST BOCKS SHALL BE POURED FROM FITTING SUCH THAT THEY BEAR ON THE THE UNDISTURBED WALL OF THE TRENCH.
4. THE TABULATED CONTACT BEARING AREAS LISTED ARE FOR HORIZONTAL AND DOWNWARD THRUST ONLY, AND ARE NOT APPLICABLE FOR UPWARD THRUST.

MINIMUM SIZE OF CONCRETE THRUST BLOCKS

d	TEES & CROSSES A	B	C	90° BENDS A	B	C	45° BENDS A	B	C	22 1/2° & 11 1/4° BENDS A	B	C	REDUCERS d x d	A	B
3" & 4"	2'-0"	6"	1'-3"	2'-0"	8"	1'-3"	1'-3"	6"	1'-3"	1'-3"	6"	1'-3"			
6"	2'-0"	8"	1'-3"	2'-6"	8"	1'-3"	1'-6"	8"	1'-3"	1'-6"	8"	1'-3"	6"X 4"	1'-6"	1'-0"
8"	2'-6"	8"	1'-6"	3'-0"	8"	1'-6"	2'-0"	8"	1'-9"	1'-6"	8"	1'-9"	8"X 4"	2'-0"	1'-0"
10"	3'-0"	10"	2'-0"	3'-6"	10"	2'-0"	2'-6"	10"	2'-0"	1'-9"	10"	2'-0"	10"x6"	2'-4"	1'-3"
12"	3'-6"	10"	2'-6"	3'-9"	10"	2'-9"	2'-9"	10"	2'-6"	2'-0"	10"	2'-6"	10"x8"	2'-6"	1'-6"
16"	4'-0"	12"	3'-9"	4'-6"	12"	4'-0"	3'-9"	12"	3'-0"	2'-0"	12"	3'-6"	16"X12"	3'-2"	2'-0"
20"	4'-10"	12"	4'-0"	4'-10"	12"	4'-10"							20"X16"	3'-8"	2'-6"

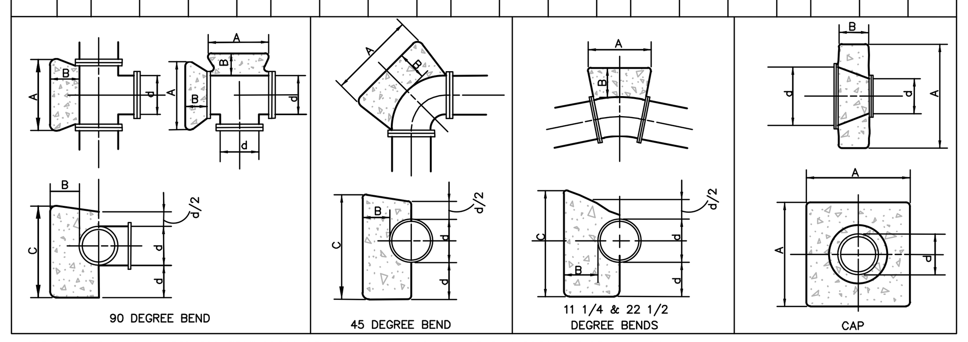

NOTE: THRUST BLOCKS SIZED FOR TEST PRESSURE OF 150 PSI AND SOIL BEARING PRESSURE OF 2,000 PSI

THRUST BLOCK NOTES:

1. THRUST BLOCKS TO BE USED FOR WATER MAIN AND FORCE MAINS AT ALL BENDS, TEES, REDUCERS AND PLUGS.
2. BEARING AREAS FOR THRUST BLOCKS ARE BASED ON THE UNDISTURBED SOIL WITH BEARING CAPACITY OF 1000 LBS. PER SQ. FT. FOR OTHER SOILS OF LESS BEARING CAPACITY, THE AREAS SHALL BE ADJUSTED ACCORDINGLY, (FIG. 14, ASCE "PIPELINE DESIGN FOR WATER AND WASTEWATER, 1975").
3. ALL CONCRETE FOR THRUST BLOCKS SHALL BE 3000 PSI COMPRESSIVE STRENGTH WITHIN 28 DAYS.
4. THE THRUST BLOCKS SHALL BE POURED FROM FITTING SUCH THAT THEY BEAR ON THE UNDISTURBED WALL OF THE TRENCH.
5. THE TABULATED CONTACT BEARING AREAS LISTED ARE FOR HORIZONTAL AND DOWNWARD THRUST ONLY AND ARE NOT APPLICABLE FOR UPWARD THRUST.

WATER MAIN TRENCH DETAIL
N.T.S.

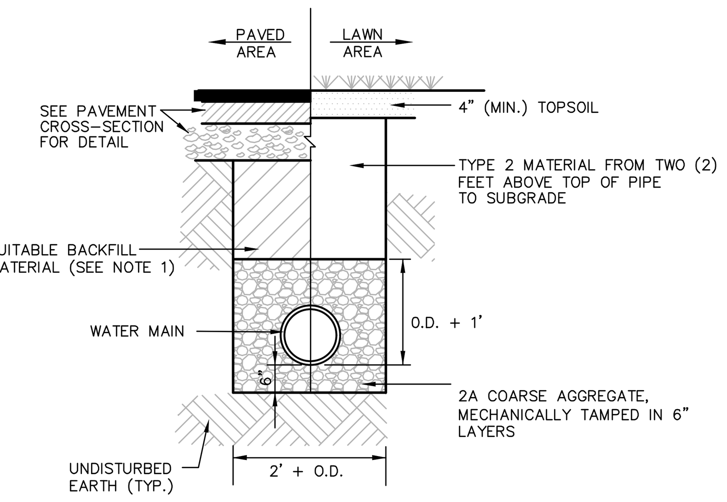

NOTES

1. SUITABLE BACKFILL MATERIAL, WHEN USED AS BACKFILL SHALL BE CAPABLE OF BEING COMPACTED TO AT LEAST NINETY-FIVE PERCENT (95%) OF MAXIMUM DENSITY AT OPTIMUM MOISTURE CONTENT.
2. TYPE 1 MATERIAL: EXCAVATED MATERIAL FROM THE TRENCH OR MATERIALS FROM OTHER SOURCES WHICH ARE FREE FROM LARGE CLODS, ROOTS, OR STONES LARGER THAT TWO INCHES MAY BE USED.
3. TYPE 2 MATERIAL: EXCAVATED MATERIAL FROM THE TRENCH OR MATERIALS FROM OTHER SOURCES WHICH ARE FREE FROM LARGE CLODS, ROOTS, OR STONES LARGER THAN EIGHT INCHES MAY BE USED.

VALVE SUPPORT
N.T.S.

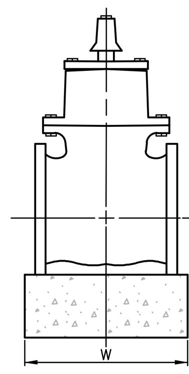

SIZE	T	W	L
6"	8"	16"	16"
8"	8"	18"	18"
12"	10"	20"	20"
16"	12"	26"	26"
20"	14"	28"	28"

AB01 - GEOGRID WALL TYPICAL
N.T.S.

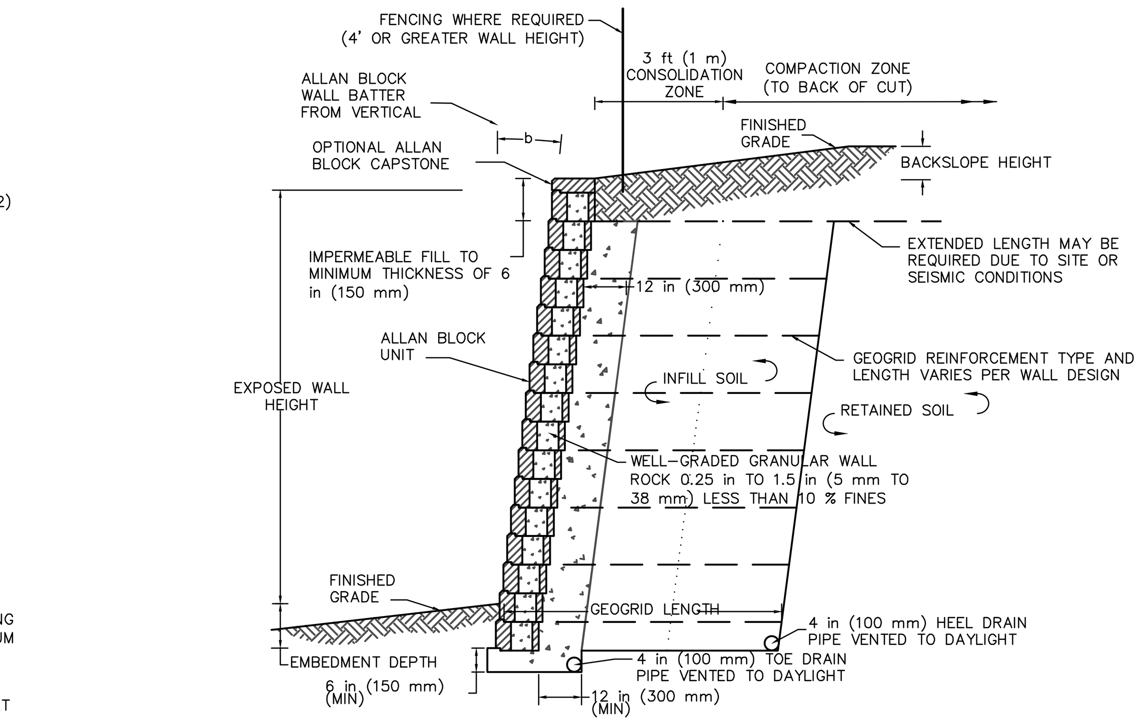

AB02 - GRAVITY WALL TYPICAL
N.T.S.

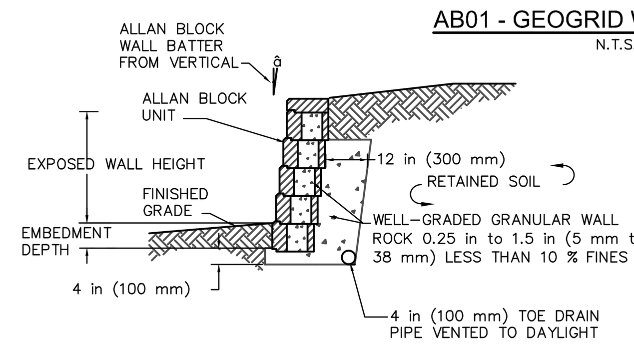

AB13 - STEP UP TYPICAL
N.T.S.

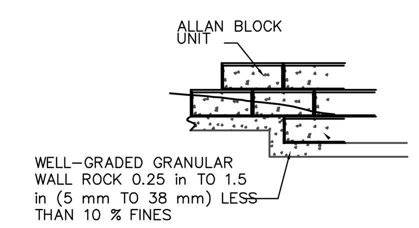

RETAINING WALL GENERAL NOTES:

1. USE ALLEN BLOCK RETAINING WALL SYSTEM OR APPROVED EQUAL. COLOR AND TEXTURE = CHILTON (GRAY STONE COLOR W/ ROUGH TEXTURED FINISH)
2. DETAILS PROVIDED IN THIS PLAN ARE GENERAL AND ASSUMED TO USE A STANDARD 18" UNIT BLOCK WITH A MAX. BACK SLOPE OF 3:1, WITH SURROUNDING SOILS CLASSIFIED AS SILTY SAND WITH ø=30°.
3. ALL RETAINING WALLS ON SITE SHALL BE DESIGNED BY A LICENSED PROFESSIONAL ENGINEER. SIGNED AND SEALED DESIGN CALCULATIONS SHALL BE PROVIDED TO TOWNSHIP ENGINEER FOR REVIEW AND APPROVAL PRIOR TO ISSUANCE OF CONSTRUCTION PERMIT.
4. ALL RETAINING WALLS CONSTRUCTED ON-SITE WILL REQUIRE A CERTIFICATION BY A LICENSED ENGINEER STATING THAT HE/SHE HAS PROVIDED ON-SITE INSPECTION DURING WALL CONSTRUCTION AND THAT PROPER METHODS WERE UTILIZED IN THE CONSTRUCTION. IN ADDITION THE WALL MUST BE CONSTRUCTED IN ACCORDANCE WITH THE APPROVED DESIGNED DRAWINGS AND THE WALL MUST BE PROPERLY STABILIZED.
5. FOR WALLS 3.5'HT OR GREATER, FALL PROTECTION (I.E. FENCE) SHALL BE CONSTRUCTED ALONG THE UPPER PORTION OF WALL.

TYPICAL SEWER LATERAL CONNECTION
N.T.S.

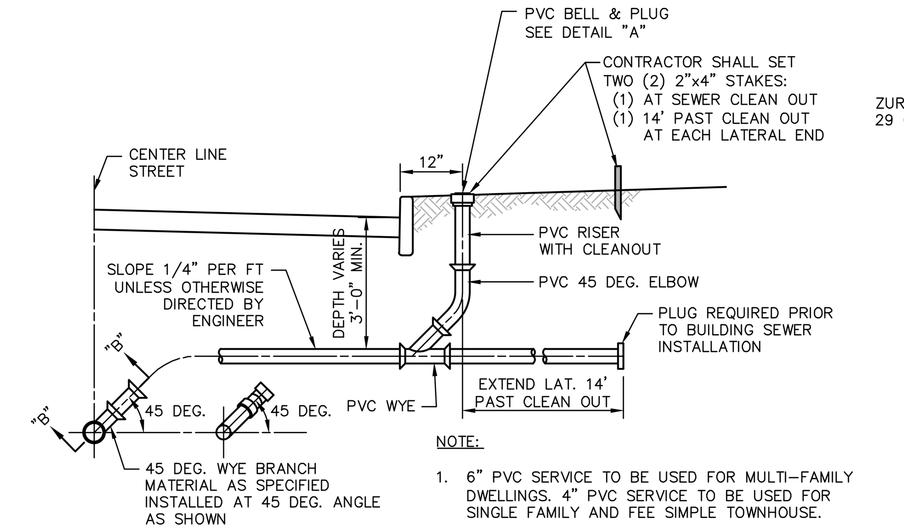

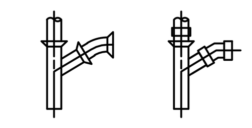

SECTION "B – B"

NOTE:

1. 6" PVC SERVICE TO BE USED FOR MULTI-FAMILY DWELLINGS. 4" PVC SERVICE TO BE USED FOR SINGLE FAMILY AND FEE SIMPLE TOWNHOUSE.
2. PLUG TO CONTAIN MAGNETIC MATERIAL.
3. SERVICE CONNECTION AND CLEANOUT TO BE FIELD LOCATED AND COMPLY WITH THE REQUIREMENTS OF THE M.U.A.
4. CLEANOUTS SHALL NOT BE LOCATED IN SIDEWALKS AND DRIVEWAYS.
5. ALL SERVICE PVC PIPE TO BE SDR-35 CONFORMING TO A.S.T.M. C-3034.

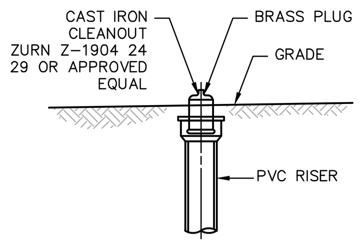

DETAIL "A"

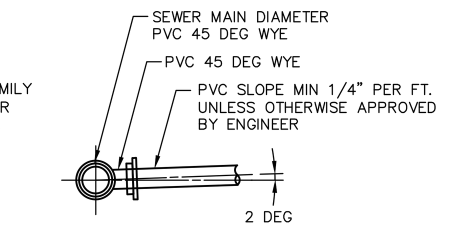

ALTERNATIVE CONNECTION AT SEWER MAIN

TYPICAL SEWER LATERAL DEEP CUT HOUSE CONNECTION

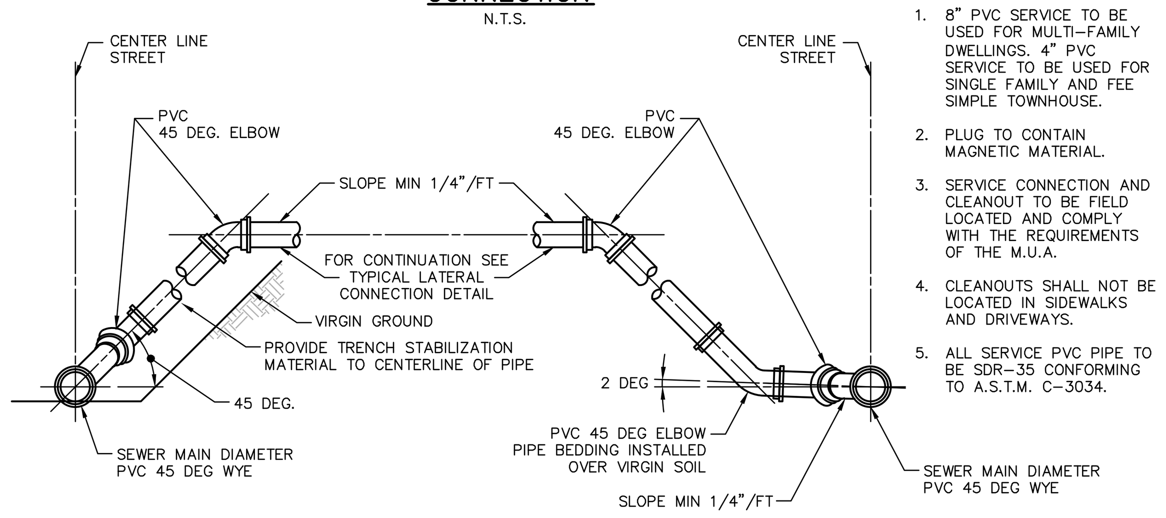

NOTE:

1. 8" PVC SERVICE TO BE USED FOR MULTI-FAMILY DWELLINGS. 4" PVC SERVICE TO BE USED FOR SINGLE FAMILY AND FEE SIMPLE TOWNHOUSE.
2. PLUG TO CONTAIN MAGNETIC MATERIAL.
3. SERVICE CONNECTION AND CLEANOUT TO BE FIELD LOCATED AND COMPLY WITH THE REQUIREMENTS OF THE M.U.A.
4. CLEANOUTS SHALL NOT BE LOCATED IN SIDEWALKS AND DRIVEWAYS.
5. ALL SERVICE PVC PIPE TO BE SDR-35 CONFORMING TO A.S.T.M. C-3034.

PIPE JOINT RESTRAINTS (TYP)
N.T.S.

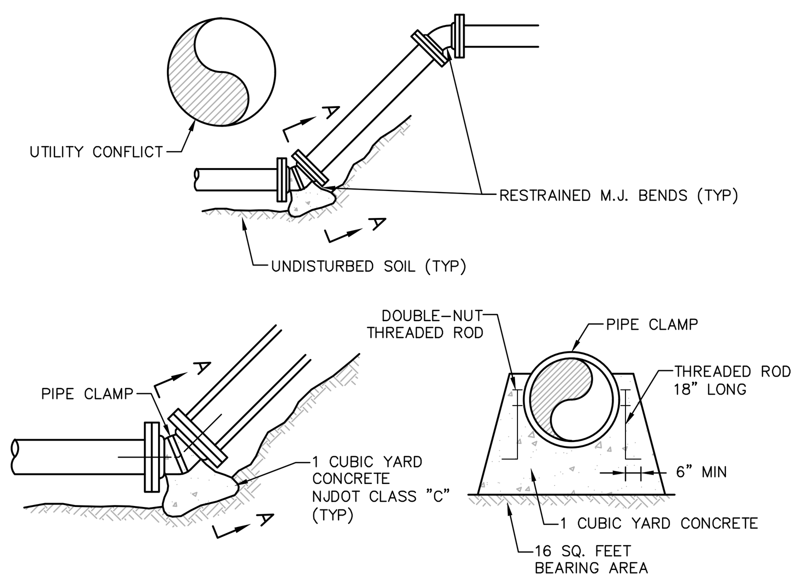

CONSTRUCTION NOTES:

1. ALL BENDS 11 1/4° OR GREATER SHALL BE RESTRAINED WITH A MECHANICAL JOINT RETAINER GLAND OR EQUAL.
2. ALL BENDS SHALL BE THRUST WITH GRAVEL AND CONCRETE.
3. JOINTS SHALL BE RESTRAINED 2 FULL PIPE LENGTHS UP AND DOWN STREAM OF 45° BENDS WITH MECHANICAL JOINT RETAINER GLAND OR EQUAL. JOINT RESTRAINT SYSTEM FOR BENDS GRATER THAN 45° SHALL BE APPROVED BY THE ENGINEER.
4. PIPE CLAMP SHALL. BE CARBON STEEL. THREADED RODS SHALL BE GRADE A-36, AREA NOT EMBEDDED IN CONCRETE SHALL BE BITUMINOUS COATED.

JOINT RESTRAINT SCHEDULE
N.T.S.

NUMBER AND SIZE OF RODS REQUIRED AND PIPE LENGTH IN FEET * TO BE RESTRAINED

PIPE SIZE IN INCHES	90° TEE OR DEAD END PLUG NO.	SIZE		45° NO.	SIZE		22 1/2° NO.	SIZE	
4	2	3/4"	30'	2	3/4"	10'	2	3/4"	5'
6	2	3/4"	40'	2	3/4"	10'	2	3/4"	5'
8	4 OR 2	3/4" OR 7/8"	50'	2	3/4"	15'	2	3/4"	5'
10	4 OR 2	3/4" OR 1"	60'	2	3/4"	20'	2	3/4"	5'
12	4	7/8"	70'	2	3/4"	20'	2	3/4"	5'
14	4	1"	80'	2	3/4"	25'	2	3/4"	5'
16	4	1"	80'	2	3/4"	25'	2	3/4"	5'

* LENGTH OF MECHANICAL JOINT RESTRAINED IS FOR EACH SIDE OF BEND

USE OF MECHANICAL JOINT RETAINER GLANDS SHALL PROVIDE A THRUST RESTRAINT SYSTEM EQUIVALENT TO THAT LISTED IN THE TABLE FOR CLAMPS AND RODS.

LENGTHS ARE BASE ON THE FOLLOWING CRITERIA:
100 PSI. WORKING PRESSURE PLUS SURGE AND 3'-8" OF COVER TABLE IS FOR USE WITH C.I./D.I.P. ONLY IF ACTUAL CONDITIONS ARE MORE SEVERE OR LARGER PIPES ARE PROPOSED, THEN SPECIAL COMPUTATION MUST BE PERFORMED BY DESIGNER.

TAPPING SLEEVES AND VALVES
N.T.S.

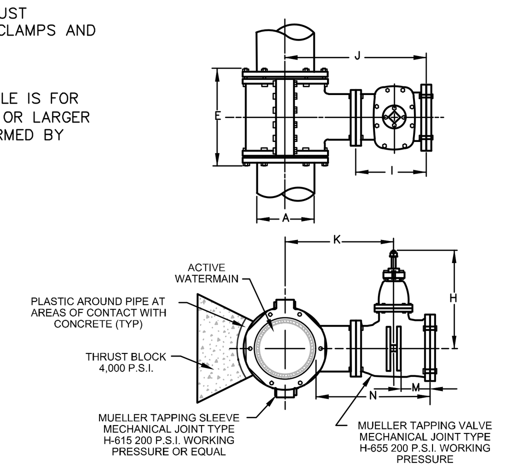

TEE SIZE (in.)	A (in.)	E (in.)	H (in.)		I (in.)	J (in.)	K (in.)	M (in.)	N (in.)
6x6	7.10	18	21	19	12	21	15	4	17
8x8	9.05	21	25	23	14	24	17	5	20
10x8	11.10	23	25	23	14	25	18	5	19
10x10	11.10	23	29	27	15	26	19	5	20
12x8	13.20	21	25	23	14	26	19	5	19
12x10	13.20	25	29	27	15	27	20	5	20
12x12	13.20	25	33	31	15	27	19	5	20

ALUM. FENCE SECTION
N.T.S.

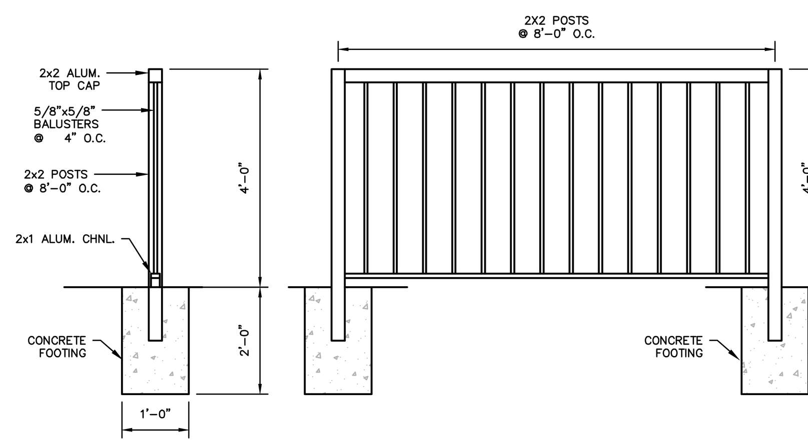

Typical Fence Post Offset

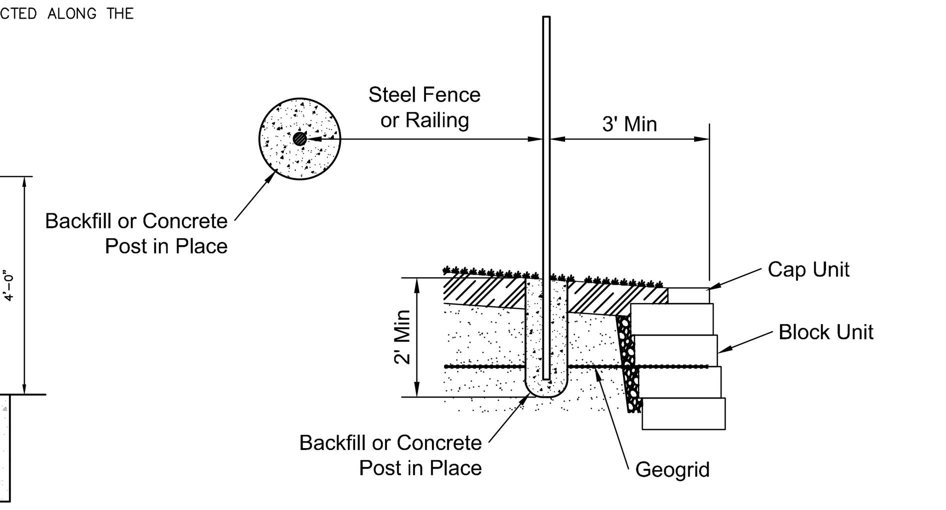

SHED SLAB FOUNDATION DETAIL
N.T.S.

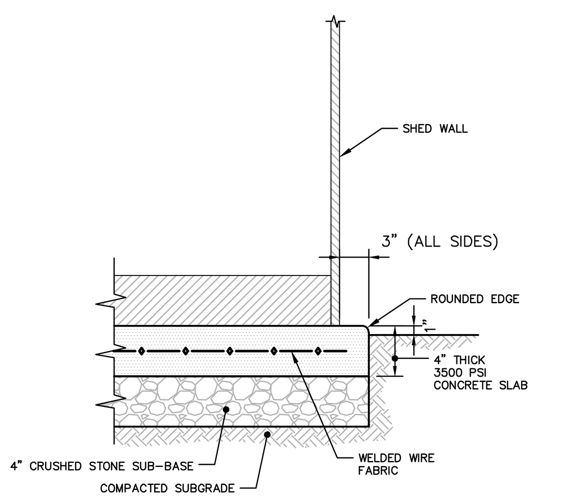

TYPICAL FIRE HYDRANT CONNECTION
N.T.S.

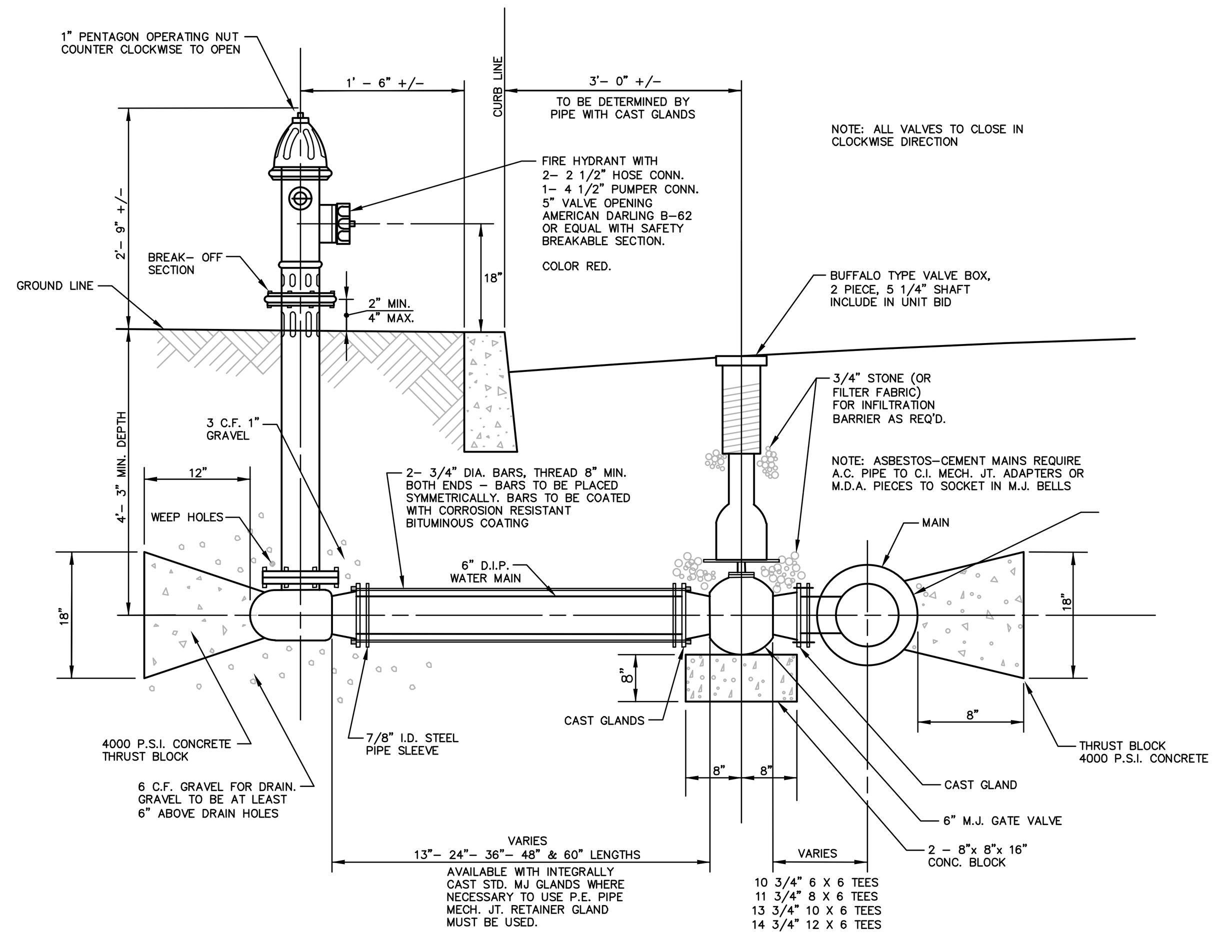

WATER/SANITARY SEWER CROSSING
CONCRETE CRADLE ENCASEMENT DETAIL
N.T.S.

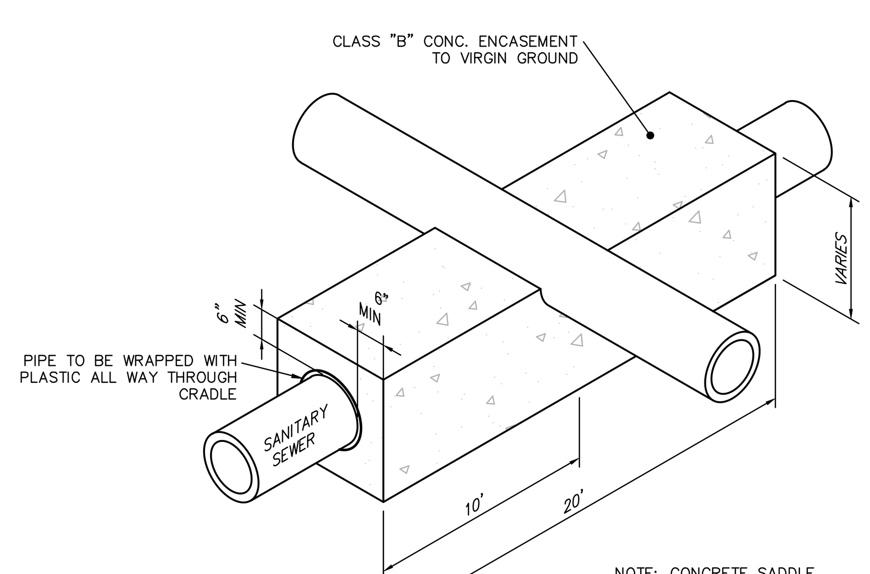

NOTE: CONCRETE SADDLE REQUIRED WHERE CLEARANCE BETWEEN SAN. SEWER AND UTILITY PIPE IS LESS THAN 18"

TRASH ENCLOSURE DETAIL
NOT TO SCALE

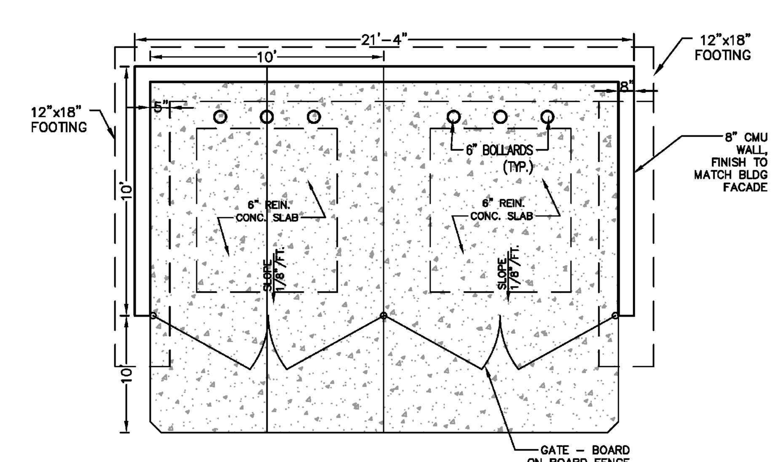

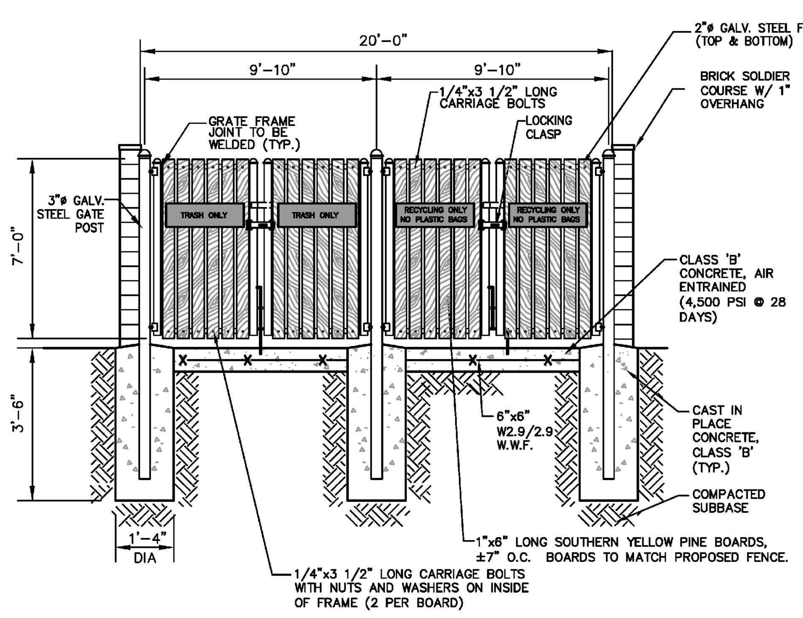

WELD ALL JOINTS TO MAKE A RIGID FRAME.

10'x10' SHED DETAIL
N.T.S.

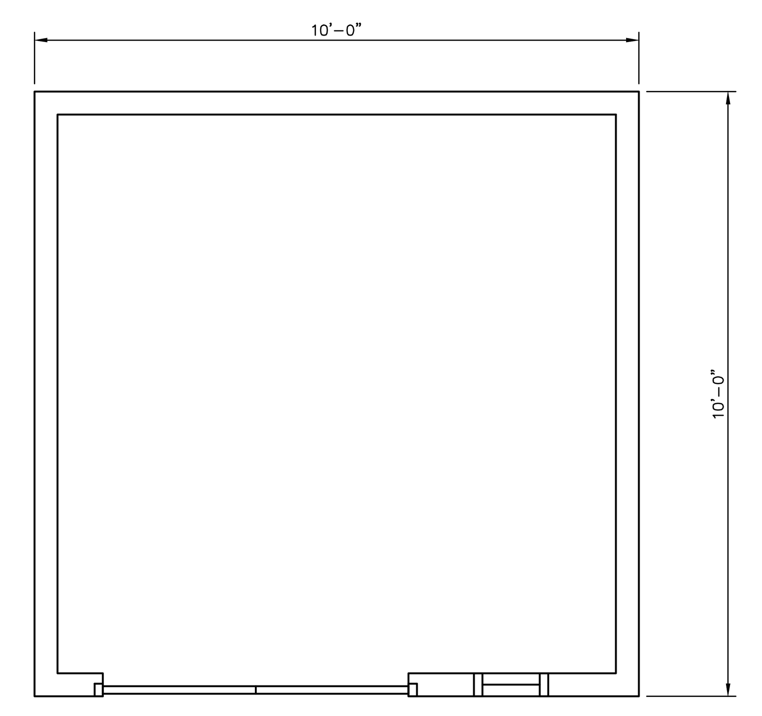

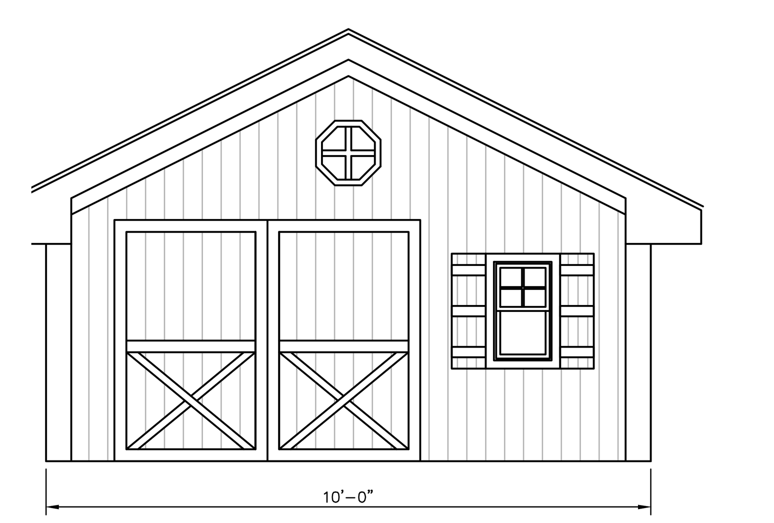

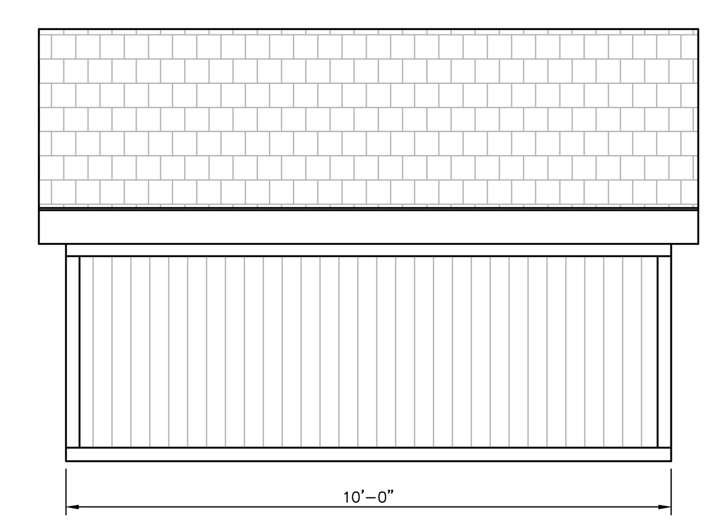

NOTE: SHED SHOWN IS EXAMPLE OF POSSIBLE PRODUCT. SHED PROVIDED TO BE SIMILAR OR EQUAL.

DATE: 10/28/21
JAY S. KRUSE
PROFESSIONAL ENGINEER
NEW JERSEY LICENSE
NO. GE041356

ESE CONSULTANTS
ENGINEERING • PLANNING • SURVEYING • ENVIRONMENTAL
ESE Consultants, Inc.
100 Willow Brook Road • Suite 200 • Freehold, NJ 07728
T: 732-446-8446
New Jersey Certificate of Authorization No. 24GA27999900

REV.	DATE	DESCRIPTION	DRAWN

New Jersey One Call
1 Corporate Place South
Suite 150
Piscataway, NJ 08854
1-800-272-1000
or 8-1-1
www.nj1-call.org

811 Know what's below. Call before you dig.

CONSTRUCTION DETAILS

FINAL MAJOR SITE PLAN
APARTMENTS AT VERONA
BLOCK 2301, LOTS 11, 12, 14-17, PORTION OF 18, AND 19, TAX MAP #23.01
TOWNSHIP OF VERONA, ESSEX COUNTY, NEW JERSEY

DATE: OCT. 28, 2021	SCALE: AS SHOWN
DESIGN:	DRAWN:
JOB NO.: 20024	FILE NAME: 20024-09-DET
REF. NO.: SD09.03	
SHEET NO.: 11 OF 13	

ESE.CTB
N:\PROJECTS\NEW JERSEY\20024-PIRHL-VERONA\ENGDEPT\DRAWINGS\20024-09-DET.DWG-TGORMLEY-10/28/2021 12:04 PM

SITE LOCATION MAP

SCALE: 1"=500'

THIS PLANS SHALL BE USED FOR EROSION AND SEDIMENT CONTROL PURPOSES ONLY

SOILS LEGEND

ON SITE SOILS		
Soil Types	Soil Description	Hydrologic Group
BouB	BOONTON – URBAN LAND, BOONTON SUBSTRATUM COMPLEX, 0 TO 8 PERCENT SLOPES	C

LEGEND

- LOD — LIMIT OF DISTURBANCE
- SOIL STOCKPILE
- PROPOSED STABILIZED CONSTRUCTION ENTRANCE
- INLET PROTECTION
- BouB — SOILS LINE
- SF — SILT FENCE

GRAPHIC SCALE: 20 0 10 20 FEET 40 80 — 1 inch = 20 ft.

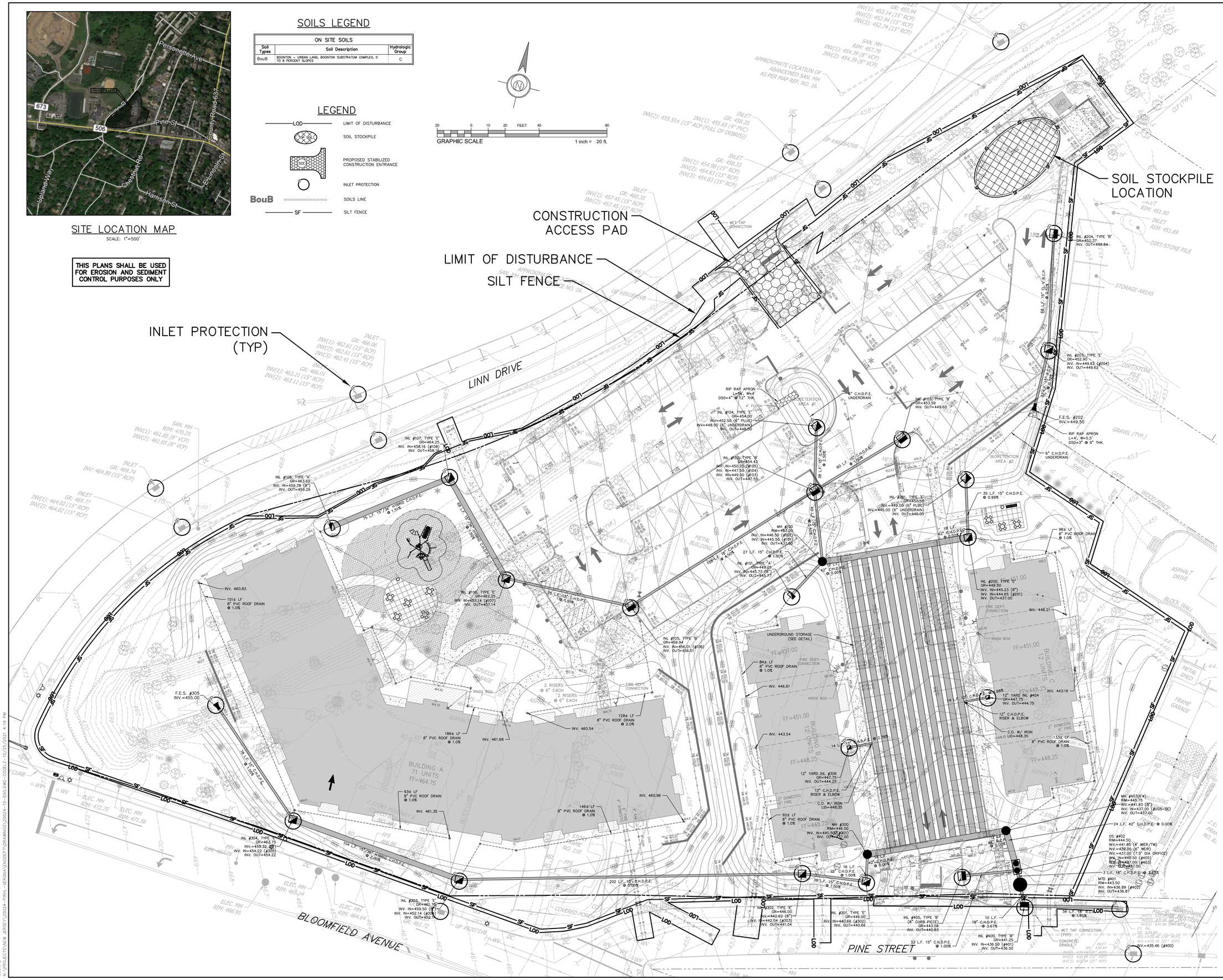

ESE CONSULTANTS
ENGINEERING • PLANNING • SURVEYING • ENVIRONMENTAL
ESE Consultants, Inc.
100 Willow Brook Road • Suite 200 • Freehold, NJ 07728
T: 732-446-8446
New Jersey Certificate of Authorization No. 24GA27999900

DATE: 10/28/21
JAY S. KRUSE
PROFESSIONAL ENGINEER
NEW JERSEY LICENSE NO. GE041356

New Jersey One Call
1 Corporate Place South
Suite 230-B
Piscataway, NJ 08854
1-800-272-1000
or 8-1-1
www.njy-call.org

Know what's below. Call before you dig.

REV.	DATE	DESCRIPTION	DRAWN

SOIL EROSION AND SEDIMENT CONTROL PLAN VIEW

FINAL MAJOR SITE PLAN

APARTMENTS AT VERONA

BLOCK 2301, LOTS 11, 12, 14–17, PORTION OF 18, AND 19, TAX MAP #23.01
TOWNSHIP OF VERONA, ESSEX COUNTY, NEW JERSEY

DATE: OCT. 28, 2021	SCALE: 1"=20'
DESIGN:	DRAWN:
JOB NO.: 20024	FILE NAME: 20024-10-ENS
REF. NO.: SD10.01	
SHEET NO.: 12 OF 13	

ESE.CTB
N:\PROJECTS\NEW JERSEY\20024-PIPHL-VERONA\ENGDEPT\DRAWINGS\20024-10-ENS.DWG-GOOLZ-10/25/2021 4:19 PM

STABILIZATION WITH MULCH ONLY

THIS PRACTICE IS APPLICABLE TO AREAS SUBJECT TO EROSION, WHERE THE SEASON AND OTHER CONDITIONS MAY NOT BE SUITABLE FOR GROWING AN EROSION–RESISTANT COVER OR WHERE STABILIZATION IS NEEDED FOR A SHORT PERIOD UNTIL MORE SUITABLE PROTECTION CAN BE APPLIED. STABILIZATION TO BE DONE IN ACCORDANCE WITH THE NEW JERSEY STANDARDS FOR SOIL EROSION AND SEDIMENT CONTROL.

METHODS AND MATERIALS

1. SITE PREPARATION

   A. GRADE AS NEEDED AND FEASIBLE TO PERMIT THE USE OF CONVENTIONAL EQUIPMENT FOR SEEDBED PREPARATION, SEEDING, MULCH APPLICATION, AND MULCH ANCHORING. ALL GRADING SHOULD BE DONE IN ACCORDANCE WITH STANDARDS FOR LAND GRADING

   B. INSTALL NEEDED EROSION CONTROL PRACTICES OR FACILITIES SUCH AS DIVERSIONS, GRADE STABILIZATION STRUCTURES, CHANNEL STABILIZATION MEASURES, SEDIMENT BASINS, AND WATERWAYS. SEE STANDARDS 11 THROUGH 42.

2. PROTECTIVE MATERIALS

   A. UNROTTED SMALL–GRAIN STRAW, AT 2.0 TO 2.5 TONS PER ACRE, IS SPREAD UNIFORMLY AT 90 TO 115 POUNDS PER 1,000 SQUARE FEET AND ANCHORED WITH A MULCH ANCHORING TOOL, LIQUID MULCH BINDERS, OR NETTING TIE DOWN. OTHER SUITABLE MATERIALS MAY BE USED IF APPROVED BY THE SOIL CONSERVATION DISTRICT. THE APPROVED RATES ABOVE HAVE BEEN MET WHEN THE MULCH COVERS THE GROUND COMPLETELY UPON VISUAL INSPECTION, I.E. THE SOIL CANNOT BE SEEN BELOW THE MULCH.

   C. SYNTHETIC OR ORGANIC SOIL STABILIZERS MAY BE USED UNDER SUITABLE CONDITIONS AND IN QUANTITIES AS RECOMMENDED BY THE MANUFACTURER.

   D. WOOD–FIBER OR PAPER–FIBER MULCH AT THE RATE OF 1,500 POUNDS PER ACRE (OR ACCORDING TO THE MANUFACTURER'S REQUIREMENTS) MAY BE APPLIED BY A HYDROSEEDER.

   E. MULCH NETTING, SUCH AS PAPER JUTE, EXCELSIOR, COTTON, OR PLASTIC, MAY BE USED.

   F. WOODCHIPS APPLIED UNIFORMLY TO A MINIMUM DEPTH OF 2 INCHES MAY BE USED. WOODCHIPS WILL NOT BE USED ON AREAS WHERE FLOWING WATER COULD WASH THEM INTO AN INLET AND PLUG IT.

   G. GRAVEL, CRUSHED STONE, OR SLAG AT THE RATE OF 9 CUBIC YARDS PER 1,000 SQ. FT. APPLIED UNIFORMLY TO A MINIMUM DEPTH OF 3 INCHES MAY BE USED. SIZE 2 OR 3 (ASTM C–33) IS RECOMMENDED.

3. MULCH ANCHORING – SHOULD BE ACCOMPLISHED IMMEDIATELY AFTER PLACEMENT OF HAY OR STRAW MULCH TO MINIMIZE LOSS BY WIND OR WATER. THIS MAY BE DONE BY ONE OF THE FOLLOWING METHODS, DEPENDING UPON THE SIZE OF THE AREA AND STEEPNESS OF SLOPES.

   A. PEG AND TWINE – DRIVE 8 TO 10 INCH WOODEN PEGS TO WITHIN 2 TO 3 INCHES OF THE SOIL SURFACE EVERY 4 FEET IN ALL DIRECTIONS. STAKES MAY BE DRIVEN BEFORE OR AFTER APPLYING MULCH. SECURE MULCH TO SOIL SURFACE BY STRETCHING TWINE BETWEEN PEGS IN A CRISS–CROSS AND A SQUARE PATTERN. SECURE TWINE AROUND EACH PEG WITH TWO OR MORE ROUND TURNS.

   B. MULCH NETTINGS – STAPLE PAPER, COTTON, OR PLASTIC NETTINGS OVER MULCH. USE DEGRADABLE NETTING IN AREAS TO BE MOWED. NETTING IS USUALLY AVAILABLE IN ROLLS 4 FEET WIDE AND UP TO 300 FEET LONG.

   C. CRIMPER MULCH ANCHORING COULTER TOOL – A TRACTOR–DRAWN IMPLEMENT ESPECIALLY DESIGNED TO PUNCH AND ANCHOR MULCH INTO THE SOIL SURFACE. THIS PRACTICE AFFORDS MAXIMUM EROSION CONTROL, BUT ITS USE IS LIMITED TO THOSE SLOPES UPON WHICH THE TRACTOR CAN OPERATE SAFELY. SOIL PENETRATION SHOULD BE ABOUT 3 TO 4 INCHES. ON SLOPING LAND, THE OPERATION SHOULD BE ON THE CONTOUR.

   D. LIQUID MULCH–BINDERS

1. APPLICATIONS SHOULD BE HEAVIER AT EDGES WHERE WIND CATCHES THE MULCH, IN VALLEYS, AND AT CRESTS OF BANKS. REMAINDER OF AREA SHOULD BE UNIFORM IN APPEARANCE.

2. USE ONE OF THE FOLLOWING:

   A. ORGANIC AND VEGETABLE BASED BINDERS – NATURALLY OCCURRING, POWDER BASED, HYDROPHILIC MATERIALS THAT MIXED WITH WATER FORMULATES A GEL AND WHEN APPLIED TO MULCH UNDER SATISFACTORY CURING CONDITIONS WILL FORM MEMBRANE NETWORKS OF INSOLUBLE POLYMERS. THE VEGETABLE GEL SHALL BE PHYSIOLOGICALLY HARMLESS AND NOT RESULT IN A PHYTO–TOXIC EFFECT OR IMPEDE GROWTH OF TURFGRASS. VEGETABLE BASED GELS SHALL BE APPLIED AT RATES AND WEATHER CONDITIONS RECOMMENDED BY THE MANUFACTURER.

   B. SYNTHETIC BINDERS – HIGH POLYMER SYNTHETIC EMULSION, MISCIBLE WITH WATER WHEN DILUTED AND FOLLOWING APPLICATION TO MULCH, DRYING AND CURING SHALL NO LONGER BE SOLUBLE OR DISPERSIBLE IN WATER. IT SHALL BE APPLIED AT RATES AND WEATHER CONDITIONS RECOMMENDED BY THE MANUFACTURER AND REMAIN TACKY UNTIL GERMINATION OF GRASS.

STANDARD FOR TOPSOIL

1. MATERIALS

   A. TOPSOIL SHOULD BE FRIABLE, LOAMY, FREE OF DEBRIS, OBJECTIONABLE WEEDS AND STONES, AND CONTAIN NO TOXIC SUBSTANCE OR ADVERSE CHEMICAL OR PHYSICAL CONDITION THAT MAY BE HARMFUL TO PLANT GROWTH. SOLUBLE SALTS SHOULD NOT BE EXCESSIVE (CONDUCTIVITY LESS THAN 0.5 MILLIOHMS PER CENTIMETER. MORE THAN 0.5 MILLIOHMS MAY DESICCATE SEEDLINGS AND ADVERSELY IMPACT GROWTH). TOPSOIL HAULED IN FROM OFFSITE SHOULD HAVE A MINIMUM ORGANIC MATTER CONTENT OF 2.75 PERCENT. ORGANIC MATTER CONTENT MAY BE RAISED BY ADDITIVES.

   B. TOPSOIL SUBSTITUTE IS A SOIL MATERIAL WHICH MAY HAVE BEEN AMENDED WITH SAND, SILT, CLAY, ORGANIC MATTER, FERTILIZER OR LIME AND HAS THE APPEARANCE OF TOPSOIL. TOPSOIL SUBSTITUTES MAY BE UTILIZED ON SITES WITH INSUFFICIENT TOPSOIL FOR ESTABLISHING PERMANENT VEGETATION. ALL TOPSOIL SUBSTITUTE MATERIALS SHALL MEET THE REQUIREMENTS OF TOPSOIL NOTED ABOVE. SOIL TESTS SHALL BE PERFORMED TO DETERMINE THE COMPONENTS OF SAND, SILT, CLAY, ORGANIC MATTER, SOLUBLE SALTS AND PH LEVEL.

2. STRIPPING AND STOCKPILING

   A. FIELD EXPLORATION SHOULD BE MADE TO DETERMINE WHETHER QUANTITY AND OR QUALITY OF SURFACE SOIL JUSTIFIES STRIPPING.

   B. STRIPPING SHOULD BE CONFINED TO THE IMMEDIATE CONSTRUCTION AREA.

   C. WHERE FEASIBLE, LIME MAY BE APPLIED BEFORE STRIPPING AT A RATE DETERMINED BY SOIL TESTS TO BRING THE SOIL PH TO APPROXIMATELY 6.5. IN LIEU OF SOIL TESTS, SEE LIME RATE GUIDE IN SEEDBED PREPARATION FOR PERMANENT VEGETATIVE COVER FOR SOIL STABILIZATION, PG. 4–1.

   D. A 4–6 INCH STRIPPING DEPTH IS COMMON, BUT MAY VARY DEPENDING ON THE PARTICULAR SOIL.

   E. STOCKPILES OF TOPSOIL SHOULD BE SITUATED SO AS NOT TO OBSTRUCT NATURAL DRAINAGE OR CAUSE OFF–SITE ENVIRONMENTAL DAMAGE.

   F. STOCKPILES SHOULD BE VEGETATED IN ACCORDANCE WITH STANDARDS PREVIOUSLY DESCRIBED HEREIN; SEE STANDARDS FOR PERMANENT (PG. 4–1) OR TEMPORARY (PG.7–1) VEGETATIVE COVER FOR SOIL STABILIZATION. WEEDS SHOULD NOT BE ALLOWED TO GROW ON STOCKPILES.

3. SITE PREPARATION

   A. GRADE AT THE ONSET OF THE OPTIMAL SEEDING PERIOD SO AS TO MINIMIZE THE DURATION AND AREA OF EXPOSURE OF DISTURBED SOIL TO EROSION. IMMEDIATELY PROCEED TO ESTABLISH VEGETATIVE COVER IN ACCORDANCE WITH THE SPECIFIED SEED MIXTURE. TIME IS OF THE ESSENCE

   B. GRADE AS NEEDED AND FEASIBLE TO PERMIT THE USE OF CONVENTIONAL EQUIPMENT FOR SEEDBED PREPARATION, SEEDING, MULCH APPLICATION AND ANCHORING, AND MAINTENANCE. SEE THE STANDARD FOR LAND GRADING, PG. 19–1.

   C. AS GUIDANCE FOR IDEAL CONDITIONS, SUBSOIL SHOULD BE TESTED FOR LIME REQUIREMENT. LIMESTONE, IF NEEDED, SHOULD BE APPLIED TO BRING SOIL TO A PH OF APPROXIMATELY 6.5 AND INCORPORATED INTO THE SOIL AS NEARLY AS PRACTICAL TO A DEPTH OF 4 INCHES.

   D. IMMEDIATELY PRIOR TO TOPSOILING, THE SURFACE SHOULD BE SCARIFIED 6" TO 12" WHERE THERE HAS BEEN SOIL COMPACTION. THIS WILL HELP INSURE A GOOD BOND BETWEEN THE TOPSOIL AND SUBSOIL. THIS PRACTICE IS PERMISSIBLE ONLY WHERE THERE IS NO DANGER TO UNDERGROUND UTILITIES (CABLES, IRRIGATION SYSTEMS, ETC.).

   E. EMPLOY NEEDED EROSION CONTROL PRACTICES SUCH AS DIVERSIONS, GRADE STABILIZATION STRUCTURES, CHANNEL STABILIZATION MEASURES, SEDIMENTATION BASINS, AND WATERWAYS. SEE STANDARDS 11 THROUGH 42.

4. APPLYING TOPSOIL

   A. TOPSOIL SHOULD BE HANDLED ONLY WHEN IT IS DRY ENOUGH TO WORK WITHOUT DAMAGING SOIL STRUCTURE; I.E., LESS THAN FIELD CAPACITY (SEE GLOSSARY).

   B. A UNIFORM APPLICATION TO A DEPTH OF 5 INCHES (UNSETTLED) IS RECOMMENDED. SOILS WITH A PH OF
   4.0 OR LESS OR CONTAINING IRON SULFIDE SHALL BE COVERED WITH A MINIMUM DEPTH OF 12 INCHES OF SOIL HAVING A PH OF 5.0 OR MORE, IN ACCORDANCE WITH THE STANDARD FOR MANAGEMENT OF HIGH ACID PRODUCING SOIL (PG. 1–1).

STANDARD FOR TEMPORARY VEGETATIVE COVER FOR SOIL STABILIZATION

1. SITE PREPARATION

   A. GRADE AS NEEDED AND FEASIBLE TO PERMIT THE USE OF CONVENTIONAL EQUIPMENT FOR SEEDBED PREPARATION, SEEDING; MULCH APPLICATION, AND MULCH ANCHORING. ALL GRADING SHOULD BE DONE IN ACCORDANCE WITH STANDARD FOR LAND GRADING.

   B. INSTALL NEEDED EROSION CONTROL PRACTICES OR FACILITIES SUCH AS DIVERSIONS, GRADE–STABILIZATION STRUCTURES, CHANNEL STABILIZATION MEASURES, SEDIMENT BASINS, AND WATERWAYS.

   C. IMMEDIATELY PRIOR TO SEEDING, THE SURFACE SHOULD BE SCARIFIED 6" TO 12" WHERE THERE HAS BEEN SOIL COMPACTION. **THIS PRACTICE IS PERMISSIBLE ONLY WHERE THERE IS NO DANGER TO UNDERGROUND UTILITIES (CABLES, IRRIGATION SYSTEMS, ETC.)**.

2. SEEDBED PREPARATION

   A. APPLY GROUND LIMESTONE AND FERTILIZER ACCORDING TO SOIL TEST RECOMMENDATIONS SUCH AS OFFERED BY RUTGERS CO–OPERATIVE EXTENSION. SOIL SAMPLE MAILERS ARE AVAILABLE FROM THE LOCAL RUTGERS COOPERATIVE EXTENSION OFFICES. FERTILIZER SHALL BE APPLIED AT THE RATE OF 500 POUNDS PER ACRE OF 11 POUNDS PER 1,000 SQUARE FEET OF 10–20–10 OR EQUIVALENT WITH 50% WATER INSOLUBLE NITROGEN UNLESS A SOIL TEST INDICATES OTHERWISE. CALCIUM CARBONATE IS THE EQUIVALENT AND STANDARD FOR MEASURING THE ABILITY OF LIMING MATERIALS TO NEUTRALIZE SOIL ACIDITY AND SUPPLY CALCIUM AND MAGNESIUM TO GRASSES AND LEGUMES.

   B. WORK LIME AND FERTILIZER INTO THE SOIL AS NEARLY AS PRACTICAL TO A DEPTH OF 4 INCHES WITH A DISC, SPRING–TOOTH HARROW, OR OTHER SUITABLE EQUIPMENT. THE FINAL HARROWING OR DISKING OPERATION SHOULD BE ON THE GENERAL CONTOUR. CONTINUE TILLAGE UNTIL A REASONABLE UNIFORM SEEDBED IS PREPARED.

   C. INSPECT SEEDBED JUST BEFORE SEEDING. IF TRAFFIC HAS LEFT THE SOIL COMPACTED, THE AREA MUST BE RETILLED IN ACCORDANCE WITH THE ABOVE.

   D. SOILS HIGH IN SULFIDES OR HAVING A PH OF 4 OR LESS REFER TO STANDARD FOR MANAGEMENT OF HIGH ACID PRODUCING SOILS.

3. SEEDING

   A. TEMPORARY VEGETATIVE STABILIZATION GRASSES, SEEDING RATES, DATES AND DEPTH

   SEED SELECTION = PERENNIAL RYEGRASS
   SEEDING RATE = 100 LBS./AC.
   OPTIMUM SEEDING DATE = MARCH 1ST – MAY 15TH, AUGUST 15TH – OCTOBER 1ST
   OPTIMUM SEED DEPTH = 0.5"

   B. CONVENTIONAL SEEDING IS PERFORMED BY APPLYING SEED UNIFORMLY BY HAND, CYCLONE (CENTRIFUGAL) SEEDER, DROP SEEDER, DRILL OR CULTIPACKER SEEDER. EXCEPT FOR DRILLED, HYDROSEEDED OR CULTIPACKED SEEDINGS, SEED SHALL BE INCORPORATED INTO THE SOIL, TO A DEPTH OF 1/4 TO 1/2 INCH, BY RAKING OR DRAGGING. DEPTH OF SEED PLACEMENT MAY BE 1/4 INCH DEEPER ON COARSE–TEXTURED SOIL.

   C. HYDROSEEDING IS A BROADCAST SEEDING METHOD USUALLY INVOLVING A TRUCK, OR TRAILER–MOUNTED TANK, WITH AN AGITATION SYSTEM AND HYDRAULIC PUMP FOR MIXING SEED, WATER AND FERTILIZER AND SPRAYING THE MIX ONTO THE PREPARED SEEDBED. **MULCH SHALL NOT BE INCLUDED IN THE TANK WITH SEED**. SHORT– FIBERED MULCH MAY BE APPLIED WITH A HYDROSEEDER FOLLOWING SEEDING. HYDROSEEDING IS NOT A PREFERRED SEEDING METHOD BECAUSE SEED AND FERTILIZER ARE APPLIED TO THE SURFACE AND NOT INCORPORATED INTO THE SOIL. POOR SEED TO SOIL CONTACT OCCURS REDUCING GERMINATION AND GROWTH. HYDROSEEDING MAY BE USED FOR AREAS TOO STEEP FOR CONVENTIONAL EQUIPMENT TO TRAVERSE OR TOO OBSTRUCTED WITH ROCKS, STUMPS, ETC.

   D. AFTER SEEDING, FIRMING THE SOIL WITH A CORRUGATED ROLLER WILL ASSURE GOOD SEED–TO–SOIL CONTACT, RESTORE CAPILLARITY, AND IMPROVE SEEDLING EMERGENCE. THIS IS THE PREFERRED METHOD. WHEN PERFORMED ON THE CONTOUR, SHEET EROSION WILL BE MINIMIZED AND WATER CONSERVATION ON SITE WILL BE MAXIMIZED.

STANDARD FOR PERMANENT VEGETATIVE COVER FOR SOIL STABILIZATION

1. SITE PREPARATION

   A. GRADE AS NEEDED AND FEASIBLE TO PERMIT THE USE OF CONVENTIONAL EQUIPMENT FOR SEEDBED PREPARATION, SEEDING; MULCH APPLICATION, AND MULCH ANCHORING. ALL GRADING SHOULD BE DONE IN ACCORDANCE WITH STANDARD FOR LAND GRADING.

   B. IMMEDIATELY PRIOR TO SEEDING AND TOPSOIL APPLICATION, THE SUBSOIL SHALL BE EVALUATED FOR COMPACTION IN ACCORDANCE WITH THE STANDARD FOR LAND GRADING.

   C. TOPSOIL SHOULD BE HANDLED ONLY WHEN IT IS DRY ENOUGH TO WORK WITHOUT DAMAGING THE SOIL STRUCTURE. A UNIFORM APPLICATION TO A DEPTH OF 5 INCHES (UNSETTLED) IS REQUIRED ON ALL SITES. TOPSOIL SHALL BE AMENDED WITH ORGANIC MATTER, AS NEEDED, IN ACCORDANCE WITH THE STANDARD FOR TOPSOILING.

   D. INSTALL NEEDED EROSION CONTROL PRACTICES OR FACILITIES SUCH AS DIVERSIONS, GRADE–STABILIZATION STRUCTURES, CHANNEL STABILIZATION MEASURES, SEDIMENT BASINS, AND WATERWAYS.

2. SEEDBED PREPARATION

   A. UNIFORMLY APPLY GROUND LIMESTONE AND FERTILIZER TO TOPSOIL WHICH HAS BEEN SPREAD AND FIRMED, ACCORDING TO SOIL TEST RECOMMENDATIONS SUCH AS OFFERED BY RUTGERS CO–OPERATIVE EXTENSION SOIL SAMPLE MAILERS ARE AVAILABLE FROM THE LOCAL RUTGERS COOPERATIVE EXTENSION OFFICES (HTTP://NJAES.RUTGERS.EDU/COUNTY/). FERTILIZER SHALL BE APPLIED AT THE RATE OF 500 POUNDS PER ACRE OR 11 POUNDS PER 1,000 SQUARE FEET OF 10–10–10 OR EQUIVALENT WITH 50% WATER INSOLUBLE NITROGEN UNLESS A SOIL TEST INDICATES OTHERWISE AND INCORPORATED INTO THE SURFACE 4 INCHES. IF FERTILIZER IS NOT INCORPORATED, APPLY ONE–HALF THE RATE DESCRIBED ABOVE DURING SEEDBED PREPARATION AND REPEAT ANOTHER ONE–HALF RATE APPLICATION OF THE SAME FERTILIZER WITHIN 3 TO 5 WEEKS AFTER SEEDING.

   B. WORK LIME AND FERTILIZER INTO THE TOPSOIL AS NEARLY AS PRACTICAL TO A DEPTH OF 4 INCHES WITH A DISC, SPRING–TOOTH HARROW, OR OTHER SUITABLE EQUIPMENT. THE FINAL HARROWING OR DISKING OPERATION SHOULD BE ON THE GENERAL CONTOUR. CONTINUE TILLAGE UNTIL A REASONABLE UNIFORM SEEDBED IS PREPARED.

   C. HIGH ACID PRODUCING SOIL. SOILS HAVING A PH OF 4 OR LESS OR CONTAINING IRON SULFIDE SHALL BE COVERED WITH A MINIMUM OF 12 INCHES OF SOIL HAVING A PH OF 5 OR MORE BEFORE INITIATING SEEDBED REPARATION. SEE STANDARD FOR MANAGEMENT OF HIGH ACID–PRODUCING SOILS FOR SPECIFIC REQUIREMENTS.

3. SEEDING

   A. SELECT A MIXTURE FROM TABLE 4–3 OR USE A MIXTURE RECOMMENDED BY RUTGERS COOPERATIVE EXTENSION OR NATURAL RESOURCES CONSERVATION SERVICE WHICH IS APPROVED BY THE SOIL CONSERVATION DISTRICT. SEED GERMINATION SHALL HAVE BEEN TESTED WITHIN 12 MONTHS OF THE PLANTING DATE. NO SEED SHALL BE ACCEPTED WITH A GERMINATION TEST DATE MORE THAN 12 MONTHS OLD UNLESS RETESTED.

   - SEEDING RATES SPECIFIED ARE REQUIRED WHEN A REPORT OF COMPLIANCE IS REQUESTED PRIOR TO ACTUAL ESTABLISHMENT OF PERMANENT VEGETATION. UP TO 50% REDUCTION IN RATES MAY BE USED WHEN PERMANENT VEGETATION IS ESTABLISHED PRIOR TO A REPORT OF COMPLIANCE INSPECTION. THESE RATES APPLY TO ALL METHODS OF SEEDING. ESTABLISHING PERMANENT VEGETATION MEANS 80% VEGETATIVE COVERAGE WITH THE SPECIFIED SEED MIXTURE FOR THE SEEDED AREA AND MOWED ONCE.
   - WARM–SEASON MIXTURES ARE GRASSES AND LEGUMES WHICH MAXIMIZE GROWTH AT HIGH TEMPERATURES, GENERALLY 850 F AND ABOVE. SEE TABLE 4–3 MIXTURES 1 TO 7. PLANTING RATES FOR WARM–SEASON GRASSES SHALL BE THE AMOUNT OF PURE LIVE SEED (PLS) AS DETERMINED BY GERMINATION TESTING RESULTS.
   - COOL–SEASON MIXTURES ARE GRASSES AND LEGUMES WHICH MAXIMIZE GROWTH AT TEMPERATURES BELOW 850F. MANY GRASSES BECOME ACTIVE AT 650F. SEE TABLE 4–3, MIXTURES 8–20. ADJUSTMENT OF PLANTING RATES TO COMPENSATE FOR THE AMOUNT OF PLS IS NOT REQUIRED FOR COOL SEASON GRASSES.

   B. CONVENTIONAL SEEDING IS PERFORMED BY APPLYING SEED UNIFORMLY BY HAND, CYCLONE (CENTRIFUGAL) SEEDER, DROP SEEDER, DRILL OR CULTIPACKER SEEDER. EXCEPT FOR DRILLED, HYDROSEEDED OR CULTIPACKED SEEDINGS, SEED SHALL BE INCORPORATED INTO THE SOIL WITHIN 24 HOURS OF SEEDBED PREPARATION TO A DEPTH OF 1/4 TO 1/2 INCH, BY RAKING OR DRAGGING. DEPTH OF SEED PLACEMENT MAY BE 1/4 INCH DEEPER ON COARSE–TEXTURED SOIL.

   C. AFTER SEEDING, FIRMING THE SOIL WITH A CORRUGATED ROLLER WILL ASSURE GOOD SEED–TO–SOIL CONTACT, RESTORE CAPILLARITY, AND IMPROVE SEEDLING EMERGENCE. THIS IS THE PREFERRED METHOD. WHEN PERFORMED ON THE CONTOUR, SHEET EROSION WILL BE MINIMIZED AND WATER CONSERVATION ON SITE WILL BE MAXIMIZED.

   D. HYDROSEEDING IS A BROADCAST SEEDING METHOD USUALLY INVOLVING A TRUCK, OR TRAILER–MOUNTED TANK, WITH AN AGITATION SYSTEM AND HYDRAULIC PUMP FOR MIXING SEED, WATER AND FERTILIZER AND SPRAYING THE MIX ONTO THE PREPARED SEEDBED. **MULCH SHALL NOT BE INCLUDED IN THE TANK WITH SEED**. SHORT– FIBERED MULCH MAY BE APPLIED WITH A HYDROSEEDER FOLLOWING SEEDING. (ALSO SEE SECTION 4–MULCHING BELOW). HYDROSEEDING IS NOT A PREFERRED SEEDING METHOD BECAUSE SEED AND FERTILIZER ARE APPLIED TO THE SURFACE AND NOT INCORPORATED INTO THE SOIL. WHEN POOR SEED TO SOIL CONTACT OCCURS, THERE IS A REDUCED SEED GERMINATION AND GROWTH.

4. MULCHING

   MULCHING IS REQUIRED ON ALL SEEDING. MULCH WILL PROTECT AGAINST EROSION BEFORE GRASS IS ESTABLISHED AND WILL PROMOTE FASTER AND EARLIER ESTABLISHMENT. THE EXISTENCE OF VEGETATION SUFFICIENT TO CONTROL SOIL EROSION SHALL BE DEEMED COMPLIANCE WITH THIS MULCHING REQUIREMENT.

   A. STRAW OR HAY. UNROTTED SMALL GRAIN STRAW, HAY FREE OF SEEDS, TO BE APPLIED AT THE RATE OF 1–1/2 TO 2 TONS PER ACRE (70 TO 90 POUNDS PER 1,000 SQUARE FEET), EXCEPT THAT WHERE A CRIMPER IS USED INSTEAD OF A LIQUID MULCH–BINDER (TACKIFYING OR ADHESIVE AGENT), THE RATE OF APPLICATION IS 3 TONS PER ACRE. MULCH CHOPPER–BLOWERS MUST NOT GRIND THE MULCH. HAY MULCH IS NOT RECOMMENDED FOR ESTABLISHING FINE TURF OR LAWNS DUE TO THE PRESENCE OF WEED SEED.

   APPLICATION – SPREAD MULCH UNIFORMLY BY HAND OR MECHANICALLY SO THAT AT LEAST 85% OF THE SOIL SURFACE IS COVERED. FOR UNIFORM DISTRIBUTION OF HAND–SPREAD MULCH, DIVIDE AREA INTO APPROXIMATELY 1,000 SQUARE FEET SECTIONS AND DISTRIBUTE 70 TO 90 POUNDS WITHIN EACH SECTION.

   ANCHORING SHALL BE ACCOMPLISHED IMMEDIATELY AFTER PLACEMENT TO MINIMIZE LOSS BY WIND OR WATER. THIS MAY BE DONE BY ONE OF THE FOLLOWING METHODS, DEPENDING UPON THE SIZE OF THE AREA, STEEPNESS OF SLOPES, AND COSTS.

   - PEG AND TWINE. DRIVE 8 TO 10 INCH WOODEN PEGS TO WITHIN 2 TO 3 INCHES OF THE SOIL SURFACE EVERY 4 FEET IN ALL DIRECTIONS. STAKES MAY BE DRIVEN BEFORE OR AFTER APPLYING MULCH. SECURE MULCH TO SOIL SURFACE BY STRETCHING TWINE BETWEEN PEGS IN A CRISS–CROSS AND A SQUARE PATTERN. SECURE TWINE AROUND EACH PEG WITH TWO OR MORE ROUND TURNS.
   - MULCH NETTINGS – STAPLE PAPER, JUTE, COTTON, OR PLASTIC NETTINGS TO THE SOIL SURFACE. USE A DEGRADABLE NETTING IN AREAS TO BE MOWED.
   - CRIMPER (MULCH ANCHORING COULTER TOOL) – A TRACTOR–DRAWN IMPLEMENT, SOMEWHAT LIKE A DISC HARROW, ESPECIALLY DESIGNED TO PUSH OR CUT SOME OF THE BROADCAST LONG FIBER MULCH 3 TO 4 INCHES INTO THE SOIL SO AS TO ANCHOR IT AND LEAVE PART STANDING UPRIGHT. THIS TECHNIQUE IS LIMITED TO AREAS TRAVERSABLE BY A TRACTOR, WHICH MUST OPERATE ON THE CONTOUR OF SLOPES. STRAW MULCH RATE MUST BE 3 TONS PER ACRE. NO TACKIFYING OR ADHESIVE AGENT IS REQUIRED.
   - LIQUID MULCH–BINDERS – MAY BE USED TO ANCHOR SALT HAY, HAY OR STRAW MULCH.

     a. APPLICATIONS SHOULD BE HEAVIER AT EDGES WHERE WIND MAY CATCH THE MULCH, IN VALLEYS, AND AT CRESTS OF BANKS. THE REMAINDER OF THE AREA SHOULD BE UNIFORM IN APPEARANCE.

     b. USE ONE OF THE FOLLOWING:

     (1) ORGANIC AND VEGETABLE BASED BINDERS – NATURALLY OCCURRING, POWDER–BASED, HYDROPHILIC MATERIALS WHEN MIXED WITH WATER FORMULATES A GEL AND WHEN APPLIED TO MULCH UNDER SATISFACTORY CURING CONDITIONS WILL FORM MEMBRANED NETWORKS OF INSOLUBLE POLYMERS. THE VEGETABLE GEL SHALL BE PHYSIOLOGICALLY HARMLESS AND NOT RESULT IN A PHYTOTOXIC EFFECT OR IMPEDE GROWTH OF TURF GRASS. USE AT RATES AND WEATHER CONDITIONS AS RECOMMENDED BY THE MANUFACTURER TO ANCHOR MULCH MATERIALS. MANY NEW PRODUCTS ARE AVAILABLE, SOME OF WHICH MAY NEED FURTHER EVALUATION FOR USE IN THIS STATE.

     (2) SYNTHETIC BINDERS – HIGH POLYMER SYNTHETIC EMULSION, MISCIBLE WITH WATER WHEN DILUTED AND, FOLLOWING APPLICATION OF MULCH, DRYING AND CURING, SHALL NO LONGER BE SOLUBLE OR DISPERSIBLE IN WATER. BINDER SHALL BE APPLIED AT RATES RECOMMENDED BY THE MANUFACTURER AND REMAIN TACKY UNTIL GERMINATION OF GRASS.

     NOTE: ALL NAMES GIVEN ABOVE ARE REGISTERED TRADE NAMES. THIS DOES NOT CONSTITUTE A RECOMMENDATION OF THESE PRODUCTS TO THE EXCLUSION OF OTHER PRODUCTS.

   B. WOOD–FIBER OR PAPER–FIBER MULCH – SHALL BE MADE FROM WOOD, PLANT FIBERS OR PAPER CONTAINING NO GROWTH OR GERMINATION INHIBITING MATERIALS, USED AT THE RATE OF 1,500 POUNDS PER ACRE (OR AS RECOMMENDED BY THE PRODUCT MANUFACTURER) AND MAY BE APPLIED BY A HYDROSEEDER. **MULCH SHALL NOT BE MIXED IN THE TANK WITH SEED**. USE IS LIMITED TO FLATTER SLOPES AND DURING OPTIMUM SEEDING PERIODS IN SPRING AND FALL.

   C. PELLETIZED MULCH – COMPRESSED AND EXTRUDED PAPER AND/OR WOOD FIBER PRODUCT, WHICH MAY CONTAIN CO–POLYMERS, TACKIFIERS, FERTILIZERS, AND COLORING AGENTS. THE DRY PELLETS, WHEN APPLIED TO A SEEDED AREA AND WATERED, FORM A MULCH MAT. PELLETIZED MULCH SHALL BE APPLIED IN ACCORDANCE WITH THE MANUFACTURER'S RECOMMENDATIONS. MULCH MAY BE APPLIED BY HAND OR MECHANICAL SPREADER AT THE RATE OF 60–75 LBS/1,000 SQUARE FEET AND ACTIVATED WITH 0.2 TO 0.4 INCHES OF WATER. THIS MATERIAL HAS BEEN FOUND TO BE BENEFICIAL FOR USE ON SMALL LAWN OR RENOVATION AREAS, SEEDED AREAS WHERE WEED–SEED FREE MULCH IS DESIRED, OR ON SITES WHERE STRAW MULCH AND TACKIFIER AGENT ARE NOT PRACTICAL OR DESIRABLE. APPLYING THE FULL 0.2 TO 0.4 INCHES OF WATER AFTER SPREADING PELLETIZED MULCH ON THE SEED BED IS EXTREMELY IMPORTANT FOR SUFFICIENT ACTIVATION AND EXPANSION OF THE MULCH TO PROVIDE SOIL COVERAGE.

5. IRRIGATION (WHERE FEASIBLE)

   IF SOIL MOISTURE IS DEFICIENT SUPPLY NEW SEEDING WITH ADEQUATE WATER (A MINIMUM OF 1/4 INCH APPLIED UP TO TWICE A DAY UNTIL VEGETATION IS WELL ESTABLISHED). THIS IS ESPECIALLY TRUE WHEN SEEDINGS ARE MADE IN ABNORMALLY DRY OR HOT WEATHER OR ON DROUGHTY SITES.

6. TOPDRESSING

   SINCE SOIL ORGANIC MATTER CONTENT AND SLOW RELEASE NITROGEN FERTILIZER (WATER INSOLUBLE) ARE PRESCRIBED IN SECTION 2A – SEEDBED PREPARATION IN THIS STANDARD, NO FOLLOW–UP OF TOPDRESSING IS MANDATORY. AN EXCEPTION MAY BE MADE WHERE GROSS NITROGEN DEFICIENCY EXISTS IN THE SOIL TO THE EXTENT THAT TURF FAILURE MAY DEVELOP. IN THAT INSTANCE, TOPDRESS WITH 10–10–10 OR EQUIVALENT AT 300 POUNDS PER ACRE OR 7 POUNDS PER 1,000 SQUARE FEET EVERY 3 TO 5 WEEKS UNTIL THE GROSS NITROGEN DEFICIENCY IN THE TURF IS AMELIORATED.

7. ESTABLISHING PERMANENT VEGETATIVE STABILIZATION

   THE QUALITY OF PERMANENT VEGETATION RESTS WITH THE CONTRACTOR. THE TIMING OF SEEDING, PREPARING THE SEEDBED, APPLYING NUTRIENTS, MULCH AND OTHER MANAGEMENT ARE ESSENTIAL. THE SEED APPLICATION RATES IN TABLE 4–3 ARE REQUIRED WHEN A REPORT OF COMPLIANCE IS REQUESTED PRIOR TO ACTUAL ESTABLISHMENT OF PERMANENT VEGETATION. UP TO 50% REDUCTION IN APPLICATION RATES MAY BE USED WHEN PERMANENT VEGETATION IS ESTABLISHED PRIOR TO REQUESTING A REPORT OF COMPLIANCE FROM THE DISTRICT. THESE RATES APPLY TO ALL METHODS OF SEEDING. **ESTABLISHING PERMANENT VEGETATION MEANS 80% VEGETATIVE COVER (OF THE SEEDED SPECIES) AND MOWED ONCE**. NOTE THIS DESIGNATION OF MOWED ONCE DOES NOT GUARANTEE THE PERMANENCY OF THE TURF SHOULD OTHER MAINTENANCE FACTORS BE NEGLECTED OR OTHERWISE MISMANAGED.

HUDSON ESSEX PASSAIC SOIL CONSERVATION DISTRICT SOIL EROSION AND SEDIMENT CONTROL NOTES

1. ALL SOIL EROSION AND SEDIMENT CONTROL PRACTICES ON THIS PLAN WILL BE CONSTRUCTED IN ACCORDANCE WITH THE "NEW JERSEY STANDARDS FOR SOIL EROSION AND SEDIMENT CONTROL" 7TH EDITION LAST REVISED December 2017. THESE MEASURES WILL BE INSTALLED PRIOR TO ANY MAJOR SOIL DISTURBANCE OR IN THEIR PROPER SEQUENCE AND MAINTAINED UNTIL PERMANENT PROTECTION IS ESTABLISHED.
2. SOIL TO BE EXPOSED OR STOCKPILED FOR A PERIOD OF GREATER THAN 14 DAYS, AND NOT UNDER ACTIVE CONSTRUCTION, MAY BE REQUIRED TO BE TEMPORARILY MULCHED, AND SEEDED OR OTHERWISE PROVIDED WITH VEGETATIVE COVER AS PER APPENDIX A3. THIS TEMPORARY COVER SHALL BE MAINTAINED UNTIL SUCH TIME WHEREBY PERMANENT RESTABILIZATION IS ESTABLISHED.
3. SEEDING DATES: THE FOLLOWING SEEDING DATES ARE RECOMMENDED TO BEST ESTABLISH PERMANENT VEGETATIVE COVER WITHIN MOST LOCATIONS IN THE HEPSCD: SPRING 3/1–5/15 AND FALL 8/15–10/1.
4. SEDIMENT FENCES ARE TO BE PROPERLY TRENCHED AND MAINTAINED UNTIL PERMANENT VEGETATIVE COVER IS ESTABLISHED.
5. ALL STORM DRAINAGE INLETS SHALL BE PROTECTED BY ONE OF THE PRACTICES ACCEPTED IN THE STANDARDS, AND PROTECTION SHALL REMAIN UNTIL PERMANENT STABILIZATION HAS BEEN ESTABLISHED. STORM DRAINAGE OUTLET POINTS SHALL BE PROTECTED AS REQUIRED BEFORE THEY BECOME FUNCTIONAL.
6. MULCH MATERIALS SHALL BE UN–ROTTED SMALL GRAIN STRAW APPLIED AT THE RATE OF 70 TO 90 POUNDS PER 1,000 SQUARE FEET AND ANCHORED WITH A MULCH ANCHORING TOOL, LIQUID MULCH BINDERS, OR NETTING TIE DOWN. OTHER SUITABLE MATERIALS MAY BE USED IF APPROVED BY THE SOIL CONSERVATION DISTRICT.
7. ALL EROSION CONTROL DEVICES SHALL BE PERIODICALLY INSPECTED, MAINTAINED AND CORRECTED BY THE CONTRACTOR. ANY DAMAGE INCURRED BY EROSION SHALL BE RECTIFIED IMMEDIATELY.
8. THE HUDSON–ESSEX–PASSAIC SOIL CONSERVATION DISTRICT WILL BE NOTIFIED IN WRITING AT LEAST 48 HOURS PRIOR TO ANY SOIL DISTURBING ACTIVITIES. FAX – (862) 333–4507 OR EMAIL–INFORMATION@HEPSCD.ORG
9. **THE APPLICANT MUST OBTAIN A DISTRICT ISSUED REPORT–OF–COMPLIANCE PRIOR TO APPLYING FOR THE CERTIFICATE OF OCCUPANCY OR TEMPORARY CERTIFICATE OF OCCUPANCY FROM THE RESPECTIVE MUNICIPALITY, NJ – DCA OR ANY OTHER CONTROLLING AGENCY.** CONTACT THE DISTRICT AT 862–333–4505 TO REQUEST A FINAL INSPECTION, GIVING ADVANCED NOTICE UPON COMPLETION OF THE RESTABILIZATION MEASURES. A PERFORMANCE DEPOSIT MAY BE POSTED WITH THE DISTRICT WHEN WINTER WEATHER OR SNOW COVER PROHIBITS THE PROPER APPLICATION OF SEED, MULCH, FERTILIZER OR HYDRO–SEED.
10. PAVED ROADWAYS MUST BE KEPT CLEAN AT ALL TIMES. DO NOT UTILIZE A FIRE OR GARDEN HOSE TO CLEAN ROADS UNLESS THE RUNOFF IS DIRECTED TO A PROPERLY DESIGNED AND FUNCTIONING SEDIMENT BASIN. WATER PUMPED OUT OF THE EXCAVATED AREAS CONTAINS SEDIMENTS THAT MUST BE REMOVED PRIOR TO DISCHARGING TO RECEIVING BODIES OF WATER USING REMOVABLE PUMPING STATIONS, SUMP PITS, PORTABLE SEDIMENTATION TANKS AND/OR SILT CONTROL BAGS.
11. ALL SURFACES HAVING LAWN OR LANDSCAPING AS FINAL COVER ARE TO BE PROVIDED TOPSOIL PRIOR TO RE–SEEDING, SODDING OR PLANTING. A DEPTH OF 5.0 INCHES, FIRMED IN PLACE, IS REQUIRED, AS PER THE STANDARDS FOR TOPSOILING AND LAND GRADING, EFFECTIVE DECEMBER 2017.
12. ALL PLAN REVISIONS MUST BE SUBMITTED TO THE DISTRICT FOR PROPER REVIEW AND APPROVAL.
13. A CRUSHED STONE WHEEL CLEANING TRACKING–PAD IS TO BE INSTALLED AT ALL SITE EXITS USING 2 ½ –1"CRUSHED ANGULAR STONE (ASTM 2 OR 3) TO A MINIMUM LENGTH OF 50 FEET AND MINIMUM DEPTH OF 6". ALL DRIVEWAYS MUST BE PROVIDED WITH CRUSHED STONE UNTIL PAVING IS COMPLETE.
14. STEEP SLOPES INCURRING DISTURBANCE MAY REQUIRE ADDITIONAL STABILIZATION MEASURES. THESE "SPECIAL" MEASURES SHALL BE DESIGNED BY THE APPLICANT'S ENGINEER AND BE APPROVED BY THE SOIL CONSERVATION DISTRICT.
15. **THE HUDSON–ESSEX–PASSAIC SOIL CONSERVATION DISTRICT SHALL BE NOTIFIED, IN WRITING, FOR THE SALE OF ANY PORTION OF THE PROJECT OR FOR THE SALE OF INDIVIDUAL LOTS. NEW OWNERS' INFORMATION SHALL BE PROVIDED. ADDITIONAL MEASURES DEEMED NECESSARY BY DISTRICT OFFICIALS SHALL BE IMPLEMENTED AS CONDITIONS WARRANT.**

CONSTRUCTION SEQUENCE

1. INSTALLATION OF ALL SEDIMENT AND EROSION CONTROL DEVICES PRIOR TO ANY MAJOR SOIL DISTURBANCES IN THEIR PROPER SEQUENCE AND MAINTENANCE UNTIL PERMANENT PROTECTION IS ESTABLISHED. (2+ DAYS)
2. CLEAR AND REMOVE ALL EXISTING VEGETATION, BUILDINGS, FOUNDATIONS, TANKS, CURBING, BITUMINOUS AND CONCRETE PAVEMENTS, ETC., IN THOSE AREAS WHERE NECESSARY. ALL REMAINING VEGETATION (IF ANY) TO BE PROPERLY PROTECTED AND TO REMAIN IN ITS NATURAL STATE. (1+ WEEKS)
3. CONSTRUCT BIORETENTION BASIN TO BE USED AS TEMPORARY SEDIMENT BASIN WITH OUTLET RISERS. BASIN MUST BE PERMANENTLY STABILIZED. (3+ WEEKS)
4. STRIPPING AND STOCKPILING OF TOPSOIL. STOCKPILES EXPOSED FOR MORE THAN 30 DAYS SHALL BE TEMPORARY STABILIZED. (1+ WEEK)
5. ROUGH GRADING OF THOSE AREAS TO BE DEVELOPED. (2+ WEEKS)
6. TEMPORARY STABILIZATION OF THOSE AREAS LEFT EXPOSED MORE THAN 60 DAYS. (1+ DAY).
7. LAYOUT AND LOCATION OF THE PROPOSED ROADS, BUILDING AND UTILITIES. (2+ WEEK)
8. CONSTRUCTION OF PROPOSED BUILDINGS. (4 MONTHS)
9. CONSTRUCTION OF ALL PROPOSED UTILITIES. INSTALLATION OF ALL SEDIMENT AND EROSION CONTROL DEVICES WHICH ARE AFFECTED BY THE PROPOSED UTILITIES. (4+ WEEKS)
10. CONSTRUCT UNDERGROUND STORAGE SYSTEM. (2+ WEEKS)
11. SUB–BASE TO BE APPLIED FOLLOWING ROUGH GRADING AND INSTALLATION OF UNDERGROUND IMPROVEMENTS IN ORDER TO STABILIZE PAVEMENT AREAS. (1+ WEEK)
12. CONSTRUCTION OF PROPOSED CURBS (2+ WEEKS)
13. FINE GRADING OF PAVEMENT AREAS. (1+ WEEK)
14. INSTALLATION OF BASE MATERIAL FOR PAVEMENT AREAS. (1+ WEEK)
15. PAVING OF PAVEMENT AREAS. (1+ WEEK)
16. FINE GRADING OF THE REMAINDER OF THE SITE. (1+ WEEKS)
17. REMOVAL OF TEMPORARY SEDIMENT AND EROSION CONTROL DEVICES. (1+ DAY)
18. STABILIZATION OF THE SITE WITH PERMANENT VEGETATIVE COVER AND LANDSCAPING. (1+ WEEK)
19. CONVERT TEMPORARY SEDIMENT BASIN TO PERMANENT BIORETENTION BASIN UPON PERMANENT STABILIZATION OF SITE.

SEEDING SCHEDULE

ALL AREAS NOT OCCUPIED BY BUILDINGS, PAVING, OR OTHER PLANT MATERIAL SHALL BE SODDED OR MANUALLY SEEDED.

SEED MIXTURE

FINE FESCUE (BLEND)	45 LBS./AC.
HARD FESCUE	
CHEWINGS FESCUE	
STRONG CREEPING RED FESCUE	
KENTUCKY BLUEGRASS	20 LBS./AC.
PERENNIAL RYEGRASS	5 LBS./AC.
PLUS WHITE CLOVER	

OPTIMAL SEEDING DATES

AUGUST 15TH – OCTOBER 15TH

ACCEPTABLE SEEDING DATES

MARCH 1ST – AUGUST 14TH

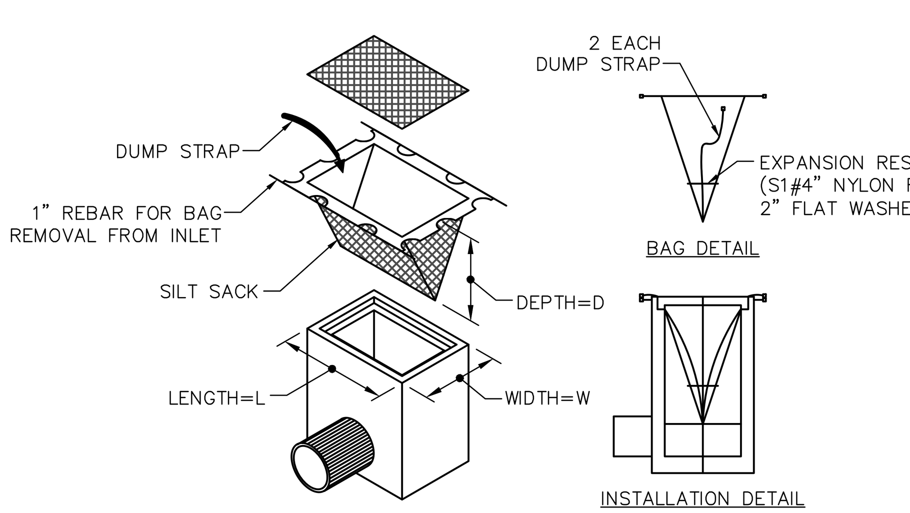

INLET PROTECTION DETAIL
SILT SACK DETAIL

(OR APPROVED EQUAL)
N.T.S.

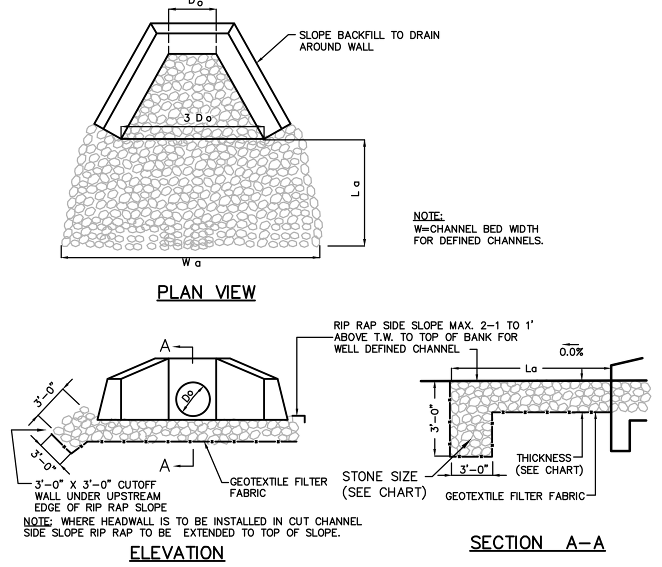

RIP RAP APRON SIZES

RIP RAP APRON	LENGTH	WIDTH	STONE SIZE	THICKNESS	FILTER FABRIC
FES #202	4 FT	5.5 FT	3"	9"	NO

RIP RAP APRON DETAIL

N.T.S.

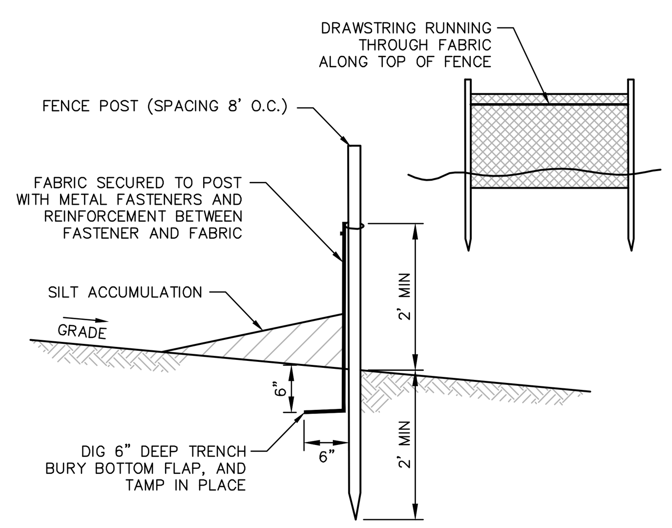

SILT FENCE SEDIMENT BARRIER

N.T.S.

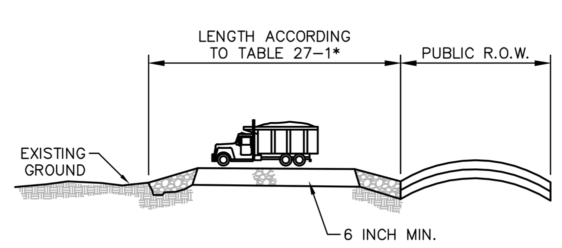

PROVIDE APPROPRIATE TRANSITION BETWEEN STABILIZED CONSTRUCTION ENTRANCE AND PUBLIC R.O.W.

PROFILE

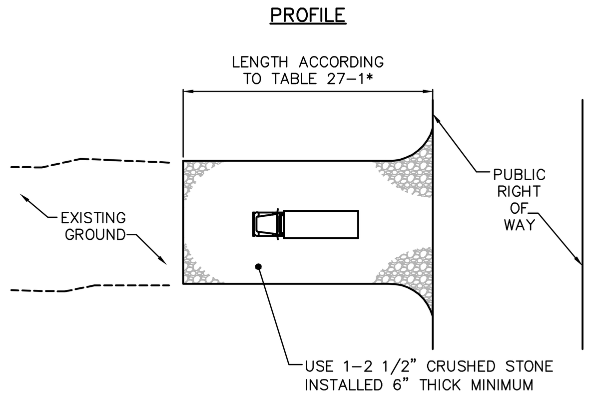

PLAN VIEW

*NOTE: INDIVIDUAL LOT ACCESS POINTS MAY REQUIRE STABILIZATION. THICKNESS SHOWN IS FOR STONE CONSTRUCTION ENTRANCE ONLY (TYP).

TABLE 27–1: LENGTHS OF CONSTRUCTION EXITS ON SLOPING ROADBEDS

PERCENT SLOPE OF ROADWAY	LENGTH OF STONE REQUIRED	
	COARSE GRAINED SOILS	FINE GRAINED SOILS
0 TO 2%	50 FT	100 FT
2 TO 5%	100 FT	200 FT
> 5%	SURFACE STABILIZED WITH HOT MIX ASPHALT BASE COURSE*	

*AS PRESCRIBED BY LOCAL ORDINANCE OR OTHER GOVERNING AUTHORITY

STABILIZED CONSTRUCTION ACCESS DETAIL

N.T.S.

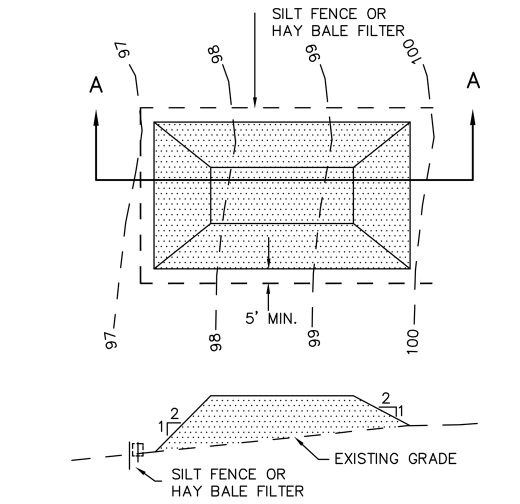

SECTION A–A

NOTES:

1. PLACE STOCKPILES AT LOCATIONS AS SHOWN ON THE SOIL EROSION ANS SEDIMENT CONTROL PLAN.
2. ALL SIDE SLOPES SHALL BE 2 TO 1 OR FLATTER.
3. STOCKPILE SHALL RECEIVE A VEGETATIVE COVER IN ACCORDANCE WITH MINIMUM STABILIZATION REQUIREMENTS.
4. SILT FENCE OR HAY BALE FILTER SHALL BE INSTALLED AS DETAILED HEREON.
5. LOCATION OF PROPOSED STOCKPILE WHICH AFFECT EROSION CONTROLS ARE SHOWN SCHEMATICALLY ONLY. ACTUALLY STOCKPILE LOCATION MAY CHANGE DURING CONSTRUCTION.

STOCKPILE DETAIL

N.T.S.

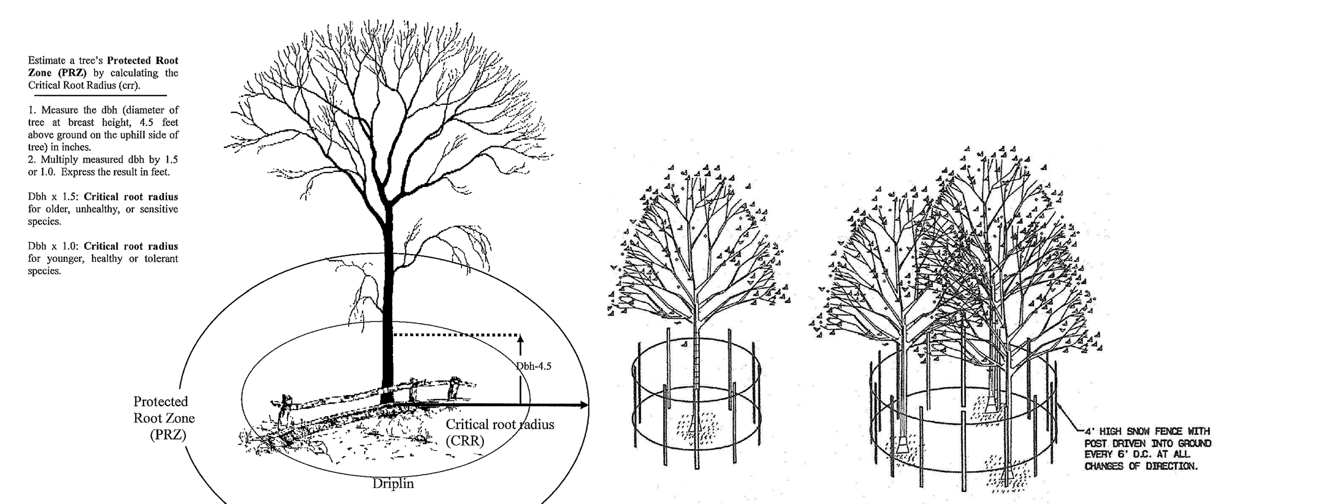

TEMPORARY TREE PROTECTION DETAIL

N.T.S.

TEMP. TREE PROTECTION NOTES:
1. TREES TO BE PROTECTED DURING CONSTRUCTION WILL BE TAGGED PRIOR TO THE START OF CONSTRUCTION. THE FINAL DETERMINATION OF THOSE TO BE PROTECTED WILL BE MADE NY THE LANDSCAPE ARCHITECT IN THE FIELD.
2. PROTECTIVE FENCING IS TO BE ERECTED PRIOR TO CONSTRUCTION AND MAINTAINED DURING CONSTRUCTION AS DIRECTED BY THE LANDSCAPE ARCHITECT.
3. FENCING SHOULD BE INSTALLED BEYOND THE CRITICAL ROOT RADIUS. SEE ROOT PROTECTION DETAIL.
4. BOARDS WILL NOT BE NAILED TO TREES DURING BUILDING OPERATIONS.
5. FEEDER ROOTS SHOULD NOT BE CUT IN AN AREA INSIDE THE DRIP LINE OF THE BRANCHES,
6. NO CONSTRUCTION ACTIVITY IS PERMITTED WITHIN THE PROTECTIVE FENCING.
7. AS CONSTRUCTION NEARS COMPLETION THE FENCING WILL BE REMOVED AS DIRECTED BY THE LANDSCAPE ARCHITECT.
8. AT THE COMPLETION OF CONSTRUCTION ALL TREES WILL BE PRUNED AS NECESSARY TO CORRECT ANY DAMAGE RESULTING FROM CONSTRUCTION ACTIVITY. THERE SHOULD BE NO FLUSH CUTS. ALL CUTS SHALL BE MADE AT THE OUTSIDE EDGE OF THE BRANCH COLLAR.

THIS PLANS SHALL BE USED FOR EROSION AND SEDIMENT CONTROL PURPOSES ONLY

DATE: 10/28/21
JAY S. KRUSE
PROFESSIONAL ENGINEER
NEW JERSEY LICENSE
NO. GE041356

ESE CONSULTANTS
ENGINEERING • PLANNING • SURVEYING • ENVIRONMENTAL
ESE Consultants, Inc.
100 Willow Brook Road • Suite 200 • Freehold, NJ 07728
T: 732-446-8446
New Jersey Certificate of Authorization No. 24GA27999900

REV.	DATE	DESCRIPTION	DRAWN

New Jersey One Call
1 Corporate Place South
Suite 150
Piscataway, NJ 08854
1-800-272-1000
or 8-1-1
www.nj1-call.org
811 Know what's below. Call before you dig.

SOIL EROSION AND SEDIMENT CONTROL NOTES AND DETAILS

FINAL MAJOR SITE PLAN
APARTMENTS AT VERONA
BLOCK 2301, LOTS 11, 12, 14–17, PORTION OF 18, AND 19, TAX MAP #23.01
TOWNSHIP OF VERONA, ESSEX COUNTY, NEW JERSEY

DATE: OCT. 28, 2021	SCALE: AS SHOWN
DESIGN: JSK	DRAWN: TJG
JOB NO.: 20024	FILE NAME: 20024–10–ENS
REF. NO.: SD10.02	
SHEET NO.: 13 OF 13	